SÓLAS

ONE6 SLIM-LINE
BUILT-IN DIRECT-VENT GAS FIREPLACE with COOL ZONE

INSTALLATION & OPERATION MANUAL

MODELS: BI-16N-SS, BI-16P-SS

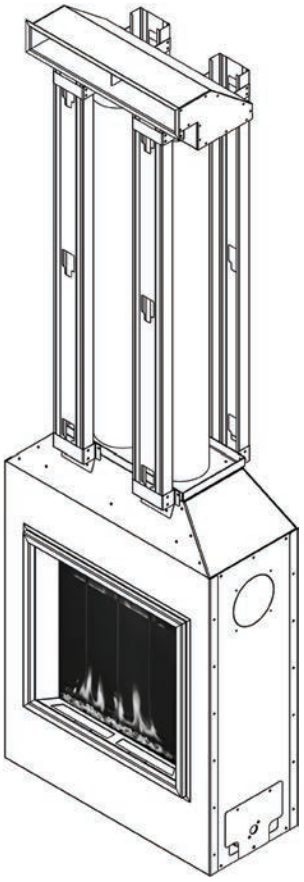

⚠ WARNING

FIRE OR EXPLOSION HAZARD

Failure to follow safety warnings exactly could result in serious injury, death, or property damage.

— Do not store or use gasoline or other flammable vapors and liquids in the vicinity of this or any other appliance.

— WHAT TO DO IF YOU SMELL GAS

- Do not try to light any appliance.
- Do not touch any electrical switch; do not use any phone in your building.
- Immediately call your gas supplier from a neighbor's phone. Follow the gas supplier's instructions.
- If you cannot reach your gas supplier, call the fire department.

— Installation and service must be performed by a qualified installer, service agency or the gas supplier.

PFS® C US
Report #F19-217

Ce manual est disponible en Francais sur demande.

This appliance may be installed in an aftermarket, permanently located, manufactured home (USA only) or mobile home, where not prohibited by local codes.

This appliance is only for use with the type of gas indicated on the rating plate. This appliance is not convertible for use with other gases, unless a certified kit is used.

DUE TO HIGH TEMPERATURES, THE APPLIANCE SHOULD BE LOCATED OUT OF TRAFFIC AND AWAY FROM FURNITURE AND DRAPERIES.

CHILDREN AND ADULTS SHOULD BE ALERTED TO THE HAZARD OF HIGH SURFACE TEMPERATURE AND SHOULD STAY AWAY TO AVOID BURNS OR CLOTHING IGNITION.

YOUNG CHILDREN SHOULD BE CAREFULLY SUPERVISED WHEN THEY ARE IN THE SAME ROOM WITH THE APPLIANCE.

CLOTHING OR OTHER FLAMMABLE MATERIAL SHOULD NOT BE PLACED ON OR NEAR THE APPLIANCE.

KEEP THE ROOM AREA CLEAR AND FREE FROM COMBUSTIBLE MATERIALS, GASOLINE, AND OTHER FLAMMABLE VAPORS AND LIQUIDS.

WARNING Improper installation, adjustment, services or maintenance can cause injury or property damage. Refer to this manual. For assistance or additional information, consult a qualified installer, service agency or the gas supplier.

⚠ DANGER

HOT GLASS
WILL CAUSE BURNS.

DO NOT TOUCH GLASS
UNTIL COOLED.

NEVER ALLOW CHILDREN
TO TOUCH GLASS.

A barrier designed to reduce the risk of burns from the hot viewing glass is provided with this appliance and must be installed for the protection of children and other at-risk individuals.

INSTALLATION RECORD

SÓLAS

The installer should complete the form below that describes the details of the installation. Having this written record of installation information available will greatly expedite trouble-shooting should any problem arise with your stove. The installer should keep a duplicate of this form for their records.

Date Purchased: _____

Dealer: _____

Date Installed: _____

Installer: _____

Fireplace Model: **ONE6 SLIM-LINE BUILT-IN**

Serial Number: _____

Brand of Venting Used: _____

Model # of Vent Cap Used: _____

Fuel: (circle one) **Natural Gas (NG)** **Propane (LP)**

Was this field converted? (circle one) YES NO

Inlet Pressure (after installation): _____

Manifold Pressure (after Installation): High Fire: _____ in. WC

Low Fire: _____ in. WC

Altitude: (feet above sea level) _____

Was the Fireplace derated? (circle one) YES NO

If the Fireplace was derated, to what orifice size? _____

Other installation notes: _____

_____

_____

_____

CONTENTS

Installation Record 2
Important Safety Information 5
Massachusetts Requirements 8
Gas Connection 8
Specifications 9
Clearances 12
Electrical & Plumbing Info 16
Venting 17
Assembly & Installation 25
Lighting & Operation 36
Remote Operation 40
Gas Conversion 46
Maintenance 50
Maintenance Log 52
Replacement Parts List 53
Control Schematic 54
Warranty Information 55

WE STRONGLY SUGGEST THAT YOU READ THIS MANUAL THOROUGHLY BEFORE BEGINNING THE INSTALLATION OF THIS DIRECT-VENT GAS FIREPLACE. ALTHOUGH THE BASIC REQUIREMENTS FOR THE INSTALLATION OF ALL DIRECT VENT GAS FIREPLACES ARE SIMILAR, EACH SPECIFIC PRODUCT HAS ITS OWN UNIQUE SET-UP AND INSTALLATION REQUIREMENTS THAT MUST BE FOLLOWED EXACTLY. PLAN YOUR INSTALLATION IN ADVANCE BY CAREFULLY REVIEWING ALL THE INFORMATION CONTAINED IN THIS MANUAL.

The information contained in this manual is believed to be correct at the time of printing. SÓLAS LLC. reserves the right to change or modify any information or specifications without notice. SÓLAS LLC grants no warranty, implied or stated, for the installation or maintenance of your appliance, and assumes no responsibility for any consequential damage(s).
© 2022 Copyright SÓLAS LLC.

Congratulations on your purchase of a SÓLAS Fireplace!

We welcome you to the SÓLAS family of gas fireplaces. Each of our products are skillfully designed and expertly manufactured in the USA. We take great pride in every fireplace we make and each product is fully tested throughout the production process to ensure your safety and warmth throughout the years.

Sincerely,

The SÓLAS Team

WARNING

Dust or particles caught in the cool zone airflow may cause staining or streaking on light colored ceilings or walls when exiting the plenum outlet. Keeping as large a distance as possible between the outlet and the ceiling will mitigate this issue.

WARNING

DO NOT cover or place objects in front of the cool wall plenum outlet. **DISCHARGE TEMPERATURES ARE HOT!** Locate outlet plenum out of reach and away from high traffic areas.

WARNING

THIS FIREPLACE MUST BE INSTALLED WITH THE COOL-ZONE PROVIDED. FAILURE TO INSTALL THE COOL-ZONE AS OUTLINED IN THIS MANUAL, REMOVAL OF, OR MODIFICATION OF THE COOL-ZONE MAY RESULT IN PROPERTY DAMAGE, INJURY, OR LOSS OF LIFE.

Félicitations pour votre achat d'un SÓLAS !

Nous vous souhaitons la bienvenue dans la famille des foyers au gaz SÓLAS. Chacun de nos produits est habilement conçu et fabriqué de manière experte aux États-Unis. Nous sommes très fiers de chaque foyer que nous fabriquons. Chaque produit est entièrement testé tout au long du processus de production pour garantir votre sécurité et votre chaleur au fil des ans.

Sincèrement,

SÓLAS

AVERTISSEMENT: Assurez vous de bien suivre les instructions données dans cette notice pour réduir e au minimum le risque d'incendie ou d'explosion ou pour éviter tout dommage matériel, toute blessure ou la mort.

Ne pas entreposer ni utiliser d'essence ni d'autres vapeurs ou liquids inflammables dans le voisinage de cet ap pareil ou de tout autre appareil.

— QUE FAIRE SI VOUS SENTEZ UNE ODEUR DE GAZ:

- **Ne pas tenter d'allumer d'appareil.**
- **Ne touchez à aucun interrupteur. Ne pas vous servir des téléphones se trouvant dans le bâtiment où vous trouvez.**
- **Appelez immédiatem ent votre fournisseur de gaz depuis un voisin. Suivez les instructions du fournisseur.**
- **Si vous ne pouvez rejoindre le fournisseur de gaz, appelez le service des incendies.**

— L'installation et l'entretien doivent être assurés par un installateur ou un s ervice d'entretien qualifié ou par le fournisseur de gaz.

Cet appareil peut être installé dans une maison préfabriquée (mobile) déjà installée à demeure si les règlements locaux le permettent.

Cet appareil doit être utilisé uniquement avec les types de gaz indiqués sur la plaque signalétique. Cet appareil ne peut être converti à d'autres gaz, sauf si une trousse de conversion est utilesée.

Ne pas utilieser cet appareils il a été plongé, meme partiellement, dans l'eau. Appeler un technician qualifié pour inspecter l'appareail et remplacer toute partie du système de commande et toute commande qui a été plongée dans / 'eau.

ATTENTION: Au moment de l'entretien des commandes, étiquetez tous les files avant de les débrancher. Des erreurs de la câblage peuvent entraîner un fonctionnement inadequate et dangereux.

S'assurer que l'appareil fonctionne adéquatement une fois l'entretien terminé.

ATTENTION: Ne pas utiliser l'appareil si la panneau frontal en verre n'est pas en place, est craqué ou brisé. Confiez le remplacement du panneau à un technician agree.

INSTALLATEUR: LAISSEZ CE MANUEL AVEC L'APPAREIL.
CONSOMMATEUR: CONSERVEZ CE MANUEL AUX FINS DE CONSULTATION ULTÉRIEURE.

IMPORTANT SAFETY INFORMATION

The installation must conform with local codes or, in the absence of local codes, with the National Fuel Gas Code, ANSI Z223.1/NFPA 54, or the Natural Gas and Propane Installation Code, CSA B149.1.

A manufactured home (USA only) or mobile home OEM installation must conform with the Manufactured Home Construction and Safety Standard, Title 24 CFR, Part 3280 or when such a standard is not applicable, the Standard for Manufactured Home Installations, ANSI/BCSBCS A225.1, or Standard for Gas Equipped Recreational Vehicles and Mobile Housing, CSA Z240.4.

The appliance and its appliance main gas valve must be disconnected from the gas supply piping system during any pressure testing of that system at test pressures in excess of 1/2 psi (3.5 kPa).

The appliance must be isolated from the gas supply piping system by closing its equipment shutoff valve during any pressure testing of the gas supply piping system at test pressures equal to or less than 1/2 psi (3.5 kPa).

The installation must provide for adequate ventilation air to the appliance.

This gas appliance must not be connected to a chimney flue serving a separate solid-fuel burning appliance.

The appliance, when installed, must be electrically grounded in accordance with local codes, or, in the absence of local codes, with the National Electrical Code ANSI/NFPA 70, or the Canadian Electrical Code, CSA C22. 1.

The appliance area must be kept clear and free from combustible materials, gasoline and other flammable vapors and liquids.

The flow of combustion and ventilation air must not be obstructed. Adequate accessibility clearances must be maintained for servicing and proper operation of this appliance.

Do not use this appliance if any part has been under water. Immediately call a qualified service technician to inspect the appliance and to replace any part of the control system and any gas control which has been under water.

Due to high temperatures, the appliance should be located out of traffic and away from furniture and draperies.

Children and adults should be alerted to the hazards of high surface temperatures and should stay away to avoid burns or clothing ignition.

Young children should be carefully supervised when they are in the same room as the appliance. Toddlers, young children and others may be susceptible to accidental contact burns. A physical barrier is recommended if there are at-risk individuals in the house. To restrict access to a fireplace or stove, install an adjustable safety gate to keep toddlers, young children and other at-risk individuals out of the room and away from hot surfaces.

A barrier designed to reduce the risk of burns from the hot viewing glass is provided with this appliance and shall be installed for the protection of children and other at-risk individuals. If the barrier becomes damaged, the barrier shall be replaced with the manufacturer's barrier for this appliance.

Clothing or other flammable material should not be placed on or near the appliance.

Any screen or guard removed for servicing an appliance must be replaced prior to operating the appliance.

Installation and repair should be done by a qualified service technician. The appliance should be inspected before use and at least annually by a professional service technician. More frequent cleaning may be required due to excessive lint from carpeting, bedding material, etc. It is imperative that the control compartments, burners and circulating air passageways of the appliance be kept clean.

WARNING: Do not operate the appliance with the glass door assembly removed, or if the glass is cracked or broken. Replacement of the glass should be done by a qualified service technician.

WARNING: Use only glass assembly, P/N BI16-510, which includes the glass panel, frame and gasket. Do not use substitute materials. Do not strike or slam the glass front. Do not use abrasive cleaners. Do not clean when hot.

CAUTION: Do not operate with broken glass.

CERTIFICATION

This appliance has been certified by PFS TECO to ANSI Z21.88-2016/CSA 2.33-2016 Vented Gas Fireplace Heaters and CAN/CGA-2.17-2017, Gas-Fired Appliances for Use At High Altitudes.

This SÓLAS Gas Fireplace is approved for installation at elevations up to 2000 feet in the U.S. and 1370 meters (4500 feet) in Canada without change. If your installation is at an elevation greater than these, consult with the local authority having jurisdiction for gas product installations to determine their specific requirements for high altitude installations.

These appliances are approved for installation in the Commonwealth of Massachusetts by the Board of State Examiners of Plumbers and Gas Fitters.

SÓLAS DIRECT VENT GAS FIREPLACES

MODEL NOS. BI-16N, BI-16P
VENTED GAS FIREPLACE HEATER
NOT FOR USE WITH SOLID FUEL.

SER. NO.
BI-16-

THIS APPLIANCE IS EQUIPPED FOR:

NATURAL GAS ☐ PROPANE (LP) GAS ☐

	Natural Gas	Propane	
Input Rating-Btu/hr	13,500	13,500	Debit Calorifique
Min. Input Rating-Btu/ hr Orifice - DMS	7,500 #53	7,500 #58	Puissance Minimum L'injector
Manifold Pressure	4.8"wc/1.2kPa	10.0"wc/2.5kPa	Press. A la tubulure
Min. Supply Pressure	5.5"wc/1.4kPa	11.0"wc/2.8kPa	Press. D'Arrivée
Max. Supply Pressure	10.0"wc/2.5kPa	13.0"wc/3.3kPa	Min Press. D'Arrivée Max

This product has been tested and listed by PFS TECO to ANSI Z21.88-2016 · CSA 2.33-2016 Vented Gas Fireplace Heaters and CSA 2.17-2017, Gas-Fired Appliances For Use At High Altitudes and CSA P.4.1-09. This appliance is equipped only for altitudes from 0-2000 feet (0-610m) in the USA and 0-4500 feet (0-1370m) in Canada without change. This appliance must be installed in accordance with local codes, if none, follow the *National Fuel Gas Code*, *ANSI Z223.1* or *Canadian Installation Codes, CAN/CSA-B149.1*. This Appliance must be properly connected to a venting system in accordance with the manufacturer's installation instructions.

MINIMUM CLEARANCES TO COMBUSTIBLE CONSTRUCTION:

Fireplace Surround to L. Side Wall	0" (0mm)
Fireplace Surround to R. Side Wall	0" (0mm)
Fireplace Surround to Corner Wall	0" (0mm)
Fireplace Surround to Ceiling Wall	0" (0mm)
Fireplace Surround to Rear Wall	0" (0mm)
Fireplace Surround to Floor	0" (0mm)

*The minimum required clearance to be maintained from the fireplace to combustible flooring is measured from the top surface of carpeting, tile, etc.
SUPPLIED COOL ZONE KIT MUST BE INSTALLED.

CAUTION: Do not operate the appliance with glass doors removed, cracked or broken. Replacement of the glass panel(s) should be done by a licensed or qualified service person. See the Owner's Manual for more information.

WARNING: Improper installation, adjustment, alteration, service or maintenance can cause injury or property damage. Refer to the owner's information manual provided with this appliance. For assistance or additional information, consult a qualified installer, service agency or the gas supplier.

CAUTION: Label all wires prior to disconnection when servicing. Wiring errors can cause improper and dangerous operation. Verify proper operation after servicing.

Keep burner and control compartments clean. See installation and operating instructions accompanying appliance.

This vented gas fireplace is not for use with air filters.

This appliance is only for use only with the type of gas indicated on the rating plate and may be installed in an aftermarket, permanently located, manufactured home (USA only) or mobile home, where not prohibited by local codes. See Owner's Manual for details.

This appliance is not convertible for use with other gases, unless a certified conversion kit is used.

This appliance must be properly connected to a Direct Vent, venting system in accordance with the manufacturer's installation instructions.

FOR USE WITH GLASS DOORS CERTIFIED WITH THE APPLIANCE ONLY.

CAUTION: HOT WHILE IN OPERATION. DO NOT TOUCH, SEVERE BURNS MAY RESULT. KEEP CHILDREN, CLOTHING, FURNITURE, GASOLINE AND OTHER LIQUIDS HAVING FLAMMABLE VAPORS AWAY.

PFS C US
Rpt. # F19-217

MANUFACTURED BY:

Progressive Manufacturing Inc.
452 Sunapee Street
Newport, NH 03773
USA

SÓLAS DIRECT VENT GAS FIREPLACES

MODEL NOS. BI-16N, BI-16P
VENTED GAS FIREPLACE HEATER
NOT FOR USE WITH SOLID FUEL.

SER. NO.
BI-16-

THIS APPLIANCE IS EQUIPPED FOR:

NATURAL GAS ☐ PROPANE (LP) GAS ☐

	Natural Gas	Propane	
Input Rating-Btu/hr	13,500	13,500	Debit Calorifique
Min. Input Rating-Btu/ hr Orifice - DMS	7,500 #53	7,500 #58	Puissance Minimum L'injector
Manifold Pressure	4.8"wc/1.2kPa	10.0"wc/2.5kPa	Press. A la tubulure
Min. Supply Pressure	5.5"wc/1.4kPa	11.0"wc/2.8kPa	Press. D'Arrivée
Max. Supply Pressure	10.0"wc/2.5kPa	13.0"wc/3.3kPa	Min Press. D'Arrivée Max

This product has been tested and listed by PFS TECO to ANSI Z21.88-2016 · CSA 2.33-2016 Vented Gas Fireplace Heaters and CSA 2.17-2017, Gas-Fired Appliances For Use At High Altitudes and CSA P.4.1-09. This appliance is equipped only for altitudes from 0-2000 feet (0-610m) in the USA and 0-4500 feet (0-1370m) in Canada without change. This appliance must be installed in accordance with local codes, if none, follow the *National Fuel Gas Code*, *ANSI Z223.1* or *Canadian Installation Codes, CAN/CSA-B149.1*. This Appliance must be properly connected to a venting system in accordance with the manufacturer's installation instructions.

MINIMUM CLEARANCES TO COMBUSTIBLE CONSTRUCTION:

Fireplace Surround to L. Side Wall	0" (0mm)
Fireplace Surround to R. Side Wall	0" (0mm)
Fireplace Surround to Corner Wall	0" (0mm)
Fireplace Surround to Ceiling Wall	0" (0mm)
Fireplace Surround to Rear Wall	0" (0mm)
Fireplace Surround to Floor	0" (0mm)

*The minimum required clearance to be maintained from the fireplace to combustible flooring is measured from the top surface of carpeting, tile, etc.
SUPPLIED COOL ZONE KIT MUST BE INSTALLED.

CAUTION: Do not operate the appliance with glass doors removed, cracked or broken. Replacement of the glass panel(s) should be done by a licensed or qualified service person. See the Owner's Manual for more information.

WARNING: Improper installation, adjustment, alteration, service or maintenance can cause injury or property damage. Refer to the owner's information manual provided with this appliance. For assistance or additional information, consult a qualified installer, service agency or the gas supplier.

CAUTION: Label all wires prior to disconnection when servicing. Wiring errors can cause improper and dangerous operation. Verify proper operation after servicing.

Keep burner and control compartments clean. See installation and operating instructions accompanying appliance.

This vented gas fireplace is not for use with air filters.

This appliance is only for use only with the type of gas indicated on the rating plate and may be installed in an aftermarket, permanently located, manufactured home (USA only) or mobile home, where not prohibited by local codes. See Owner's Manual for details.

This appliance is not convertible for use with other gases, unless a certified conversion kit is used.

This appliance must be properly connected to a Direct Vent, venting system in accordance with the manufacturer's installation instructions.

FOR USE WITH GLASS DOORS CERTIFIED WITH THE APPLIANCE ONLY.

CAUTION: HOT WHILE IN OPERATION. DO NOT TOUCH, SEVERE BURNS MAY RESULT. KEEP CHILDREN, CLOTHING, FURNITURE, GASOLINE AND OTHER LIQUIDS HAVING FLAMMABLE VAPORS AWAY.

PFS C US
Rpt. # F19-217

MANUFACTURED BY:

Progressive Manufacturing Inc.
452 Sunapee Street
Newport, NH 03773
USA

*Sample Rating Label (affixed to Control Panel within Firebox)

STATE OF MASSACHUSETTS

The installation must be completed by a licensed plumber or gas fitter in the Commonwealth of Massachusetts.

REQUIREMENTS FOR THE COMMONWEALTH OF MASSACHUSETTS

This product must be installed by a licensed plumber or gas fitter when installed within the Commonwealth of Massachusetts. If this appliance is installed in a dwelling, building or structure used in whole or in part for residential purposes and the installation includes a horizontal vent termination that is less than seven (7) feet above the finished grade in the area of the venting, including but not limited to decks and porches, a hard-wired carbon monoxide detector with an alarm and battery back-up must be installed on the floor level of the dwelling, building or structure where the appliance is to be installed.

Additionally, a hard-wired or battery operated carbon monoxide detector with an alarm must be installed on each additional level of the dwelling, building or structure served by the appliance. It shall be the responsibility of the property owner to secure the services of qualified licensed professionals for the installation of hard-wired carbon monoxide detectors.

In the event that the horizontally vented appliance is installed in a crawl space or attic, the hardwired carbon monoxide detector with alarm and battery back-up may be installed on the next adjacent floor level.

In the event that this requirement cannot be met at the time of completion of the installation of the appliance, the owner shall have a period of thirty (30) days to comply with the requirement. However, during said thirty (30) day period, a battery operated carbon monoxide detector with alarm must be installed.

Each carbon monoxide detector as required in accordance with the above provisions must comply with NFPA 720 and be ANSI/UL 2034 and IAS certified.

In addition, when the vent termination is less than seven (7) feet above finished grade a metal or plastic identification plate must be permanently mounted to the exterior of the building at a minimum height of eight (8) feet above grade directly in line with the exhaust vent terminal. The sign shall read, in print size no less than one-half (½) inch in size, “GAS VENT DIRECTLY BELOW. KEEP CLEAR OF ALL OBSTRUCTIONS".

The gas fireplace is shipped with a ⅜" tube OD (male flare) connection. The gas supply piping should have a separate gas shutoff valve and a ⅛" NPT plugged tapping upstream of the valve. The stove and its main control valve must be disconnected from the gas supply piping system during any pressure testing of that system at test pressures in excess of ½ psi (3.5 kPa). The stove must be isolated from the gas supply piping system by closing the main control valve during any pressure testing of the gas supply system at test pressures equal to or greater than ½ psi (3.5 kPa). After the gas supply has been connected, use a commercial gas leak detector or apply a soapy water solution to all the fittings to check for gas leaks. Never use a flame to test for leaks.

A COPY OF THESE INSTRUCTIONS PLUS ALL VENTING INSTRUCTIONS WHICH INCLUDE PARTS LISTS, AND/OR ALL VENTING DESIGN INSTRUCTIONS MUST REMAIN WITH THE STOVE AT THE COMPLETION OF THE INSTALLATION.

ATTENTION INSTALLERS: Mark below which venting system was used in the installation. These instructions must remain with the SÓLAS Gas Fireplace Installation & Operation Manual.

O Simpson DuraVent GS/PRO®

O Selkirk Direct-Temp®

O Security Secure Vent™

O AmeriVent Direct™

O Metal Fab Direct Vent

O ICC Direct Vent

NOTICE
Failure to follow these instructions will void the warranty.

ONE6 SPECIFICATION CHART

INPUT	NATURAL GAS	PROPANE
Input Rating	13,500 BTU/Hr.	13,500 BTU/Hr.
Min. Input Rating	7,500 BTU/Hr.	7,500 BTU/Hr.
Orifice-DMS	#53	#58
GAS SUPPLY	**NATURAL GAS**	**PROPANE**
Manifold Pressure	4.8"w.c. / 1.2kPa	10.0"w.c. / 2.5kPa
Min. Supply Pressure	5.5"w.c. / 1.4kPa	11.0"w.c. / 2.8kPa
Max. Supply Pressure	10.0"w.c. / 2.5kPa	13.0"w.c. / 3.3kPa

EFFICIENCY NG / LP	NATURAL GAS	PROPANE
Maximum Observed Steady State Efficiency - %	79.0	77.8
Steady State Efficiency - %	62.6	56.4
Annual Fuel Utilization Efficiency (AFUE) - %	50.9	45.0
Canadian p.4 Efficiency - %	56.2	47.8

NOTE: The maximum achievable steady state efficiency can vary depending on how the fireplace is installed and operated.

- It is recommended that the pilot flame be turned off if the appliance will not be in use for an extended period of time.
- This appliance is equipped for use with the fuel type indicated on the rating plate. Field conversion is only permitted with a conversion kit supplied by SÓLAS.

This appliance has been certified by PFS TECO to ANSI Z21.88-2016/CSA 2.33-2016 Vented Gas Fireplace Heaters and CSA-2.17-2017, Gas-Fired Appliances for Use At High Altitudes and CSA P.4.1-09. The is approved for installation at elevations up to 2000 feet in the U.S. and 1370 meters (4500 feet) in Canada without change. If your installation is at an elevation greater than these, consult with the local authority having jurisdiction for gas product installations to determine their specific requirements for high altitude installations.

SPECIFICATIONS

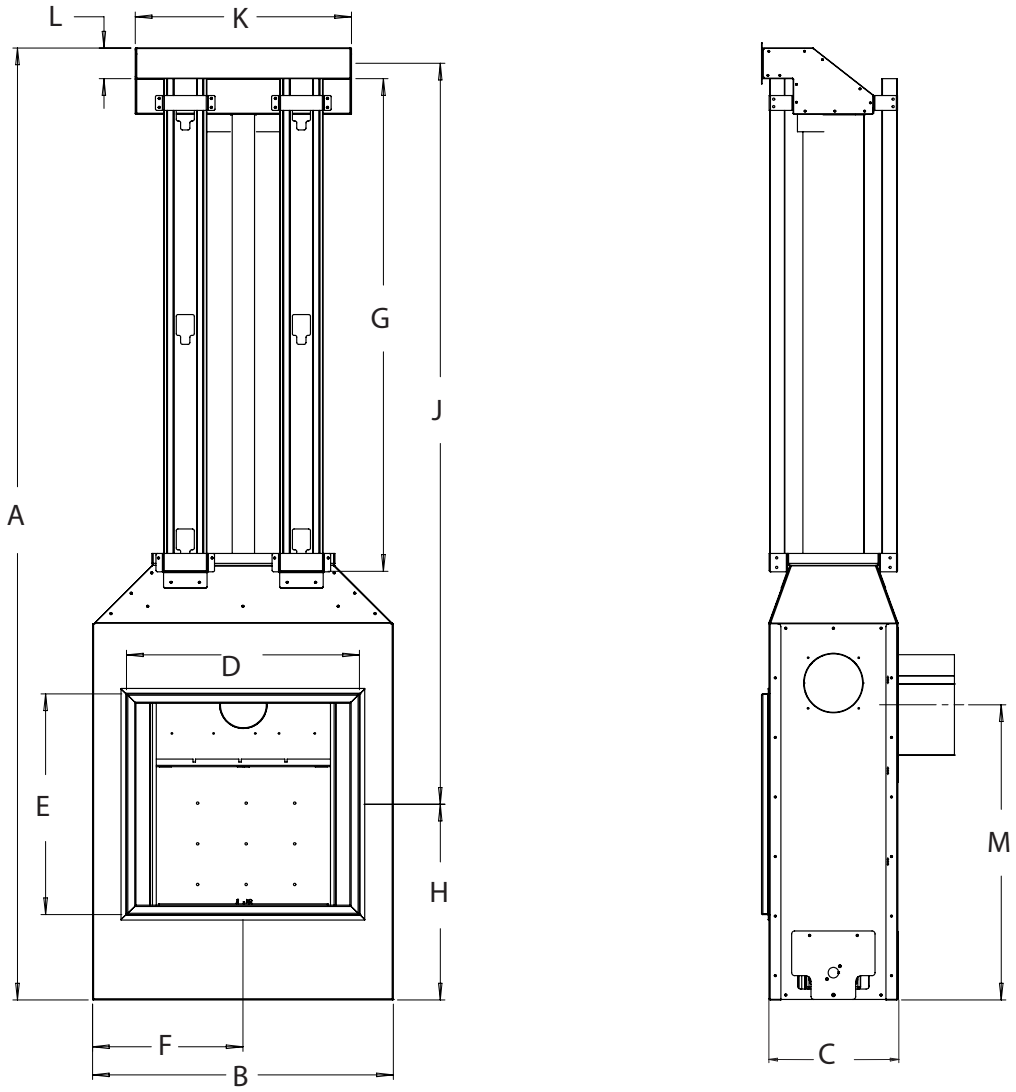

Dimension	Dimension Description	SLIM ONE6
A (Min)	Minimum Fireplace Cavity Height	68 ½" (1740mm)
A (Max)	Maximum Fireplace Cavity Height	134 ½" (3416mm)
B	Fireplace Cavity Width	25 ¼" (641mm)
C	Fireplace Cavity Depth	11 9⁄64" (283mm)
D	Glass Viewing Area Width	19 ½" (495mm)
E	Glass Viewing Area Height	18 ½" (470mm)
F	LH Side to Center of Viewing Area	12 5⁄8" (321mm)
G (Min)	Minimum Steel Stud Length	30" (762mm)
G (Max)	Maximum Steel Stud Length	96" (2438mm)
H	Floor to Centerline of Viewing Area	16 ½" (419mm)
J (Min)	Minimum Centerline of Viewing Area to Centerline of Cool Zone Plenum Outlet	50 7⁄8" (1292mm)
J (Max)	Maximum Centerline of Viewing Area to Centerline of Cool Zone Plenum Outlet	116 7⁄8" (2969mm)
K	Cool Zone Plenum Outlet Width	18 3⁄16" (462mm)
L	Cool Zone Plenum Outlet Height	2 5⁄8" (66mm)
M	Vent Centerline	24 49⁄64" (629mm)

COOL ZONE KIT CONTENTS

FIREPLACE MODEL #	KIT PART #	ITEM DESCRIPTION	ITEM PART #	ITEM QTY PER KIT
ONE6 SINGLE-SIDED BUILT-IN	BI-16-SS	ONE6 PLENUM	13366	1
		COOL ZONE 5" FLEX PIPE*	FLX-5-25	1
		COOL ZONE 5" HOSE CLAMP	12666	4
		ONE6 PLENUM OUTLET TRIM	13413	1

*The 5” Flex pipe required for this installation can be purchased from SOLAS or from a third-party supplier. Should you choose to purchase from a third-party supplier, the 5” flex used must be 2-ply thick 3003 Aluminum liner.

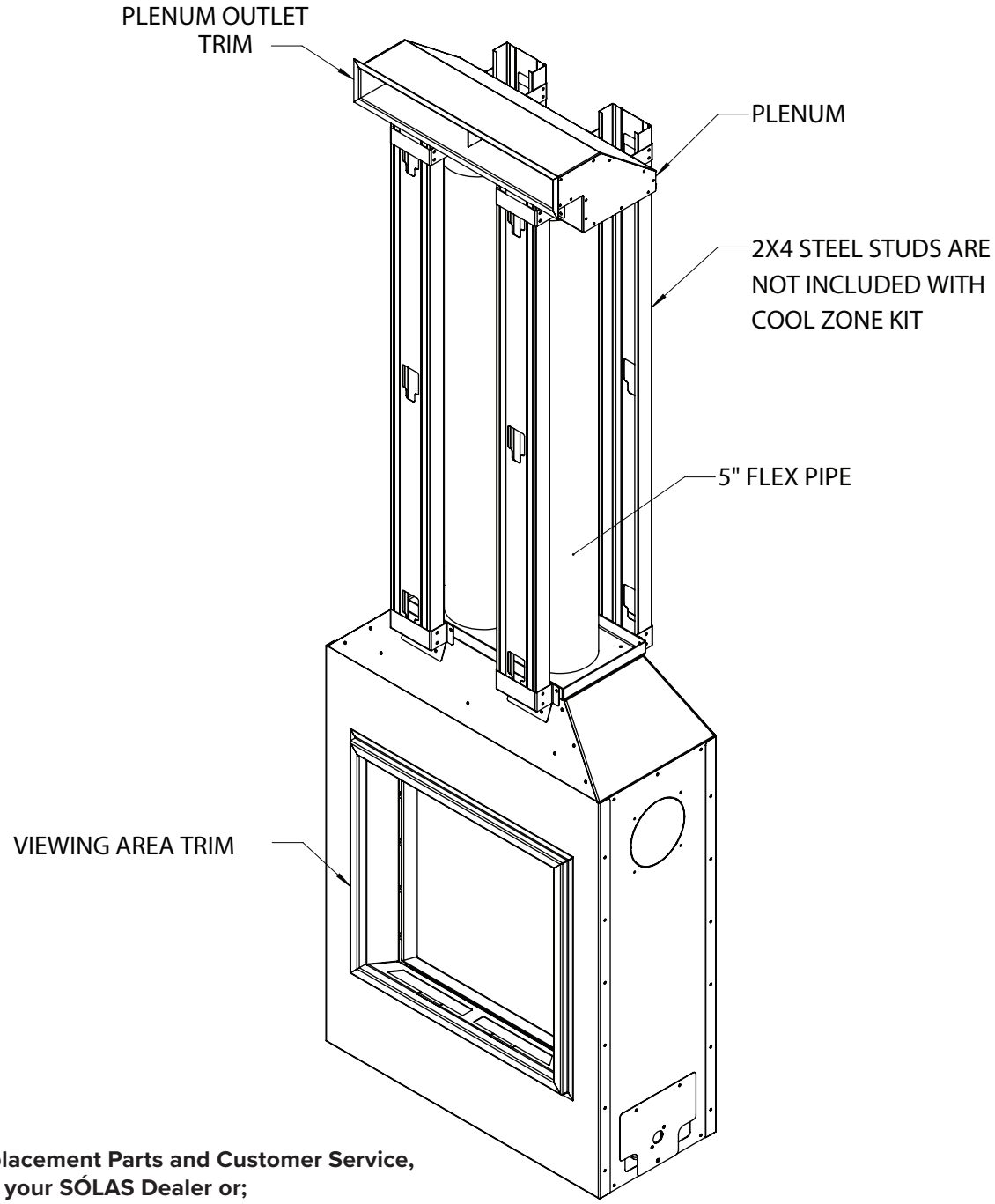

For Replacement Parts and Customer Service, contact your SÓLAS Dealer or;

SÓLAS, LLC 452 Sunapee Street, Newport, NH 03773
P (603) 298-5169 sales@solasfires.com

CLEARANCE TO COMBUSTIBLES

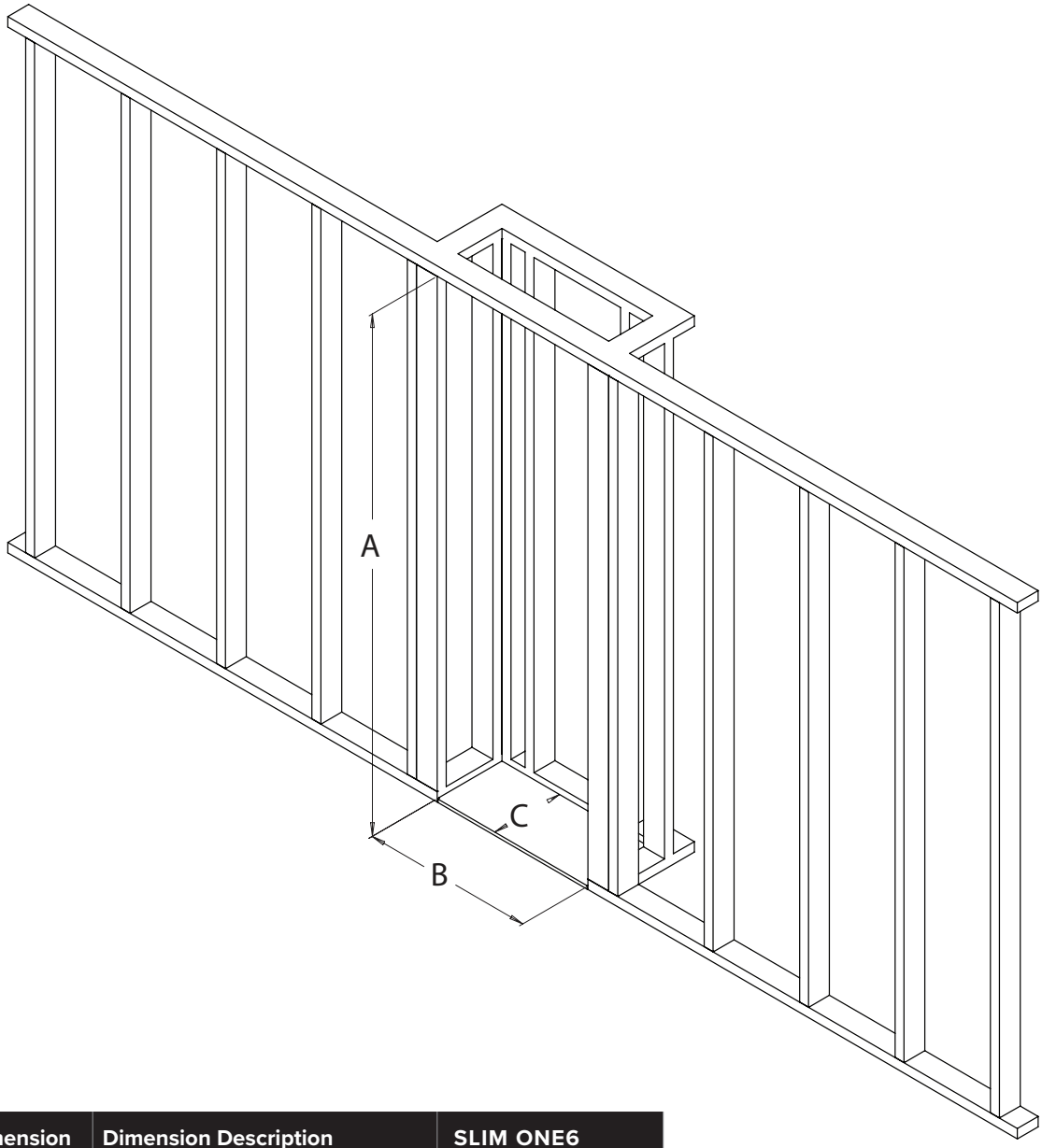

Dimension	Dimension Description	SLIM ONE6
A (Min)	Minimum Fireplace Cavity Height	68 ½" (1740mm)
A (Max)	Maximum Fireplace Cavity Height	134 ½" (3416mm)
B	Fireplace Cavity Width	25 ¼" (641mm)
C	Fireplace Cavity Depth	11 ⁹⁄₆₄" (283mm)

- 1.50” (38mm) clearance to combustibles is required around the outer diameter of the flue pipe.
- The floor the fireplace immediately rests on must be constructed of non-combustible material with an R factor of at least .37, with a minimum thickness of ½” (13mm).
- This framing guide is just an example of the many ways in which a SÓLAS Fireplace can be installed. You may need to customize this framing design to allow for things such as doors, windows, countertops, structural frame members or local code requirements.
- The sheet metal face of this fireplace must be covered by a finishing material, it may not be left exposed. Combustible finishing materials are permitted.

CLEARANCE TO COMBUSTIBLES

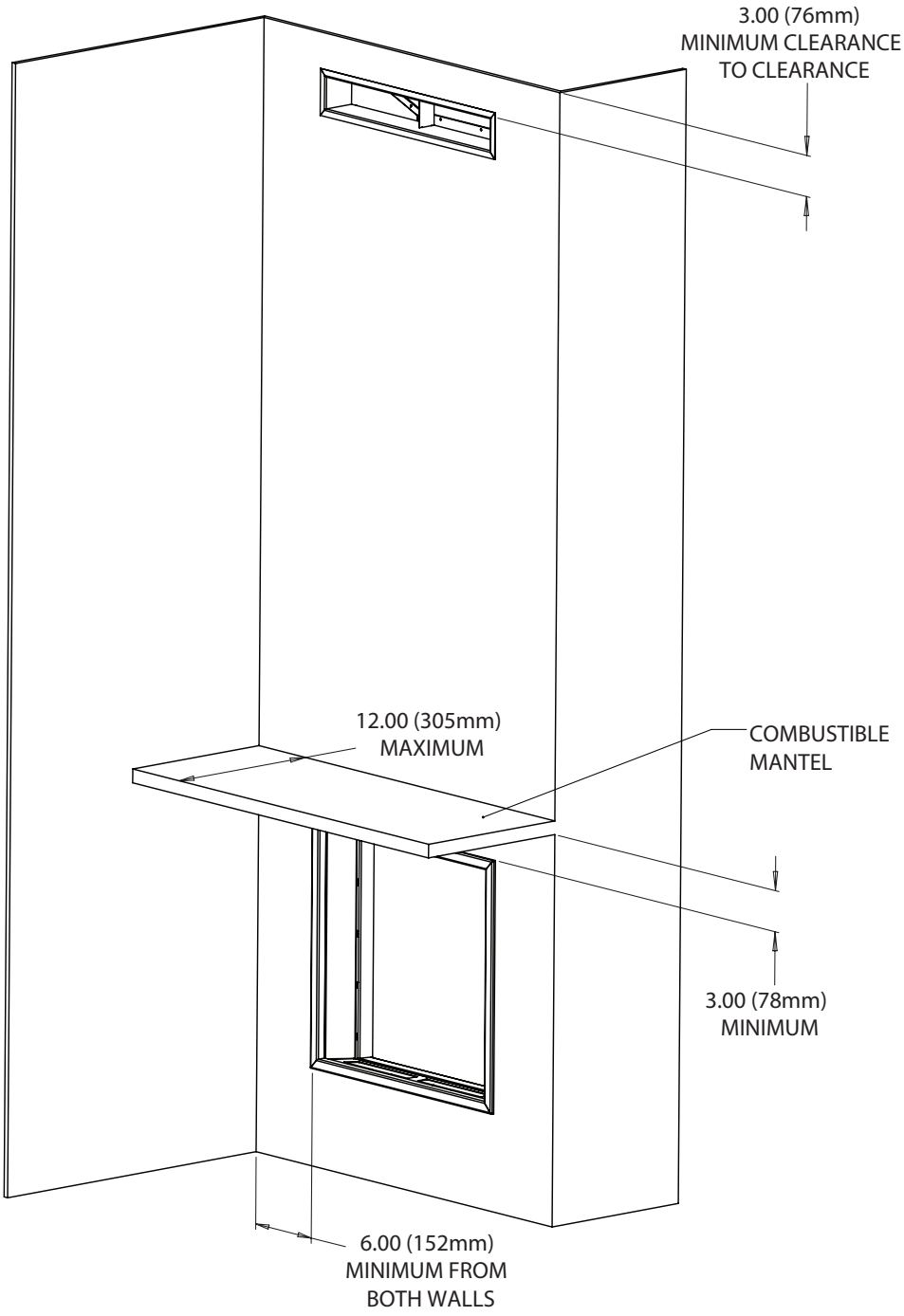

WARNING
Follow these instructions carefully to ensure safe installation. Failure to follow instructions exactly can create a fire hazard.

- The combustible area above the viewing area must not protrude more than ¾ (19mm) from the facing; if it does, it is considered a mantel and must meet the mantel requirements above.

ATTENTION:
Before proceeding with your installation, determine if you plan to use either the Power Vent kit (PV-800HZ) or the Heat Redistribution Kit (HRD-750). Read the manual for these optional components before proceeding with your installation, as your installation requirements and procedure may change.

NOTE: SÓLAS can only offer guidance as to the type of materials that can be safely used during the installation of your fireplace and cannot comment on, or be responsible for, any finishing material's propensity for fading, flaking, discoloring, cracking, or chipping due to improper installation and/or thermal expansion. Be sure to consider a material's propensity to "off-gas" when hot as this may cause discomfort for the end user.

NOTE: For a Minimal "Clean" look, we recommend using materials that have been tested for specific high heat applications and are designed not to crack or chip such as Promat and Skamol products. Any other materials used to achieve this same look might not perform as intended and are likely to discolor, crack and/or chip.

FINISHING SUGGESTIONS:

Standard gypsum board may be used beyond the perimeter of the non-combustible zone however it is preferable not to change materials to help avoid cracking. Ensure that all compound, mortar, and/or silicone adhesives are rated for high-temperature applications and have fully cured before using the fireplace to help reduce the possibility of cracking as a result of thermal expansion.

- **Tile and Stone Veneer Products:**
  Install a minimum of ½" non-combustible cement board then apply tile or stone with mortar following instructions from the finishing material company. Pre-drill cement board with oversized holes and do not over-tighten screws to avoid cracking due to thermal expansion.
- **Natural Stone, Marble or Granite Type Products:**
  Install a minimum of ½" non-combustible cement board then apply tile or stone with mortar following instructions from the finishing material company. Pre-drill cement board with oversized holes and do not over-tighten screws to avoid cracking due to thermal expansion.

Additional tips to help avoid cracking;

- Allow materials to dry thoroughly before finishing the wall.
- Always pre-drill cement board with oversized holes and use screws with self-milling head.
- Always use tape over joints.
- Double up studs or use studs "on the flat" to add extra support to the joint. Help control differential movement by applying adhesive on the backside of the wall board joints.
- Use multiple, thinner coats of joint compound and allow to completely dry between coats.
- Ensure all framing materials are dry.
- Introduce heat gradually after finishing the wall to slowly dry any excess moisture.
- Avoid notching tiles or cement board around corners of window opening and instead provide a joint that intersects the corner.
- Take guidance from your authorized fireplace dealer and experienced installer.

Consult installation and operating instructions supplied with your SÓLAS fireplace for complete instructions for the installation and operation of the appliance.

NOTE: Prior to enclosing the wall cavity, test fire the fireplace to ensure it is fully operational.

WARNING
Read all instructions completely and thoroughly before attempting installation. Failure to do so could result in serious injury, property damage, or loss of life. Operation of improperly installed or maintained venting system could result in serious injury, property damage, or loss of life.

NOTE:
Any electrical wiring, gas plumbing, or vent installation required by the appliance must be done prior to final finishing. The unit shall be test burned on high for at least 30 minutes prior to final finishing to confirm proper operation. Failure to test the appliance before final finishing may require significant and costly reconstruction.

INSTALLATION PRECAUTIONS

Consult local building codes before beginning the installation. The installer must make sure to select the proper vent system for installation. Before installing the vent kit, the installer must read this fireplace manual and vent kit instructions. Only a qualified, licensed, installer/service technician shall install the venting system. The installer must follow the following safety rules:

- Wear gloves and safety glasses for protection.
- Use extreme caution when using ladders or when on rooftops.
- Be aware of electrical wiring locations in walls and ceilings.

The following actions will void the warranty on your fireplace:

- Installation and service by non-qualified or unlicensed technician.
- Installation of any damaged venting component.
- Unauthorized modification of the appliance.
- Unauthorized modification of the venting system.
- Installation of any component part not manufactured or approved by SÓLAS Contemporary Fires.
- Installation other than permitted by these instructions.

NOTICE
Failure to follow these instructions will void the warranty.

WARNING: Unauthorized modifications of this appliance may result in property damage, injury or loss of life.

ELECTRICAL AND PLUMBING

The plumbing access panel is located on the right side of the unit.

1. Remove the (3) #10 sheet metal screws using a 5⁄16" nut driver that hold the utility access panel to the fireplace.
2. Remove the utility access panel from the fireplace exposing the gas line.
3. Have a licensed plumber connect gas piping to the 3⁄8" female flare connection provided in accordance with local codes. Be sure to check for gas leaks.
4. Reinstall utility access panel with the (3) #10 sheet metal screws using a 5⁄16" nut driver.

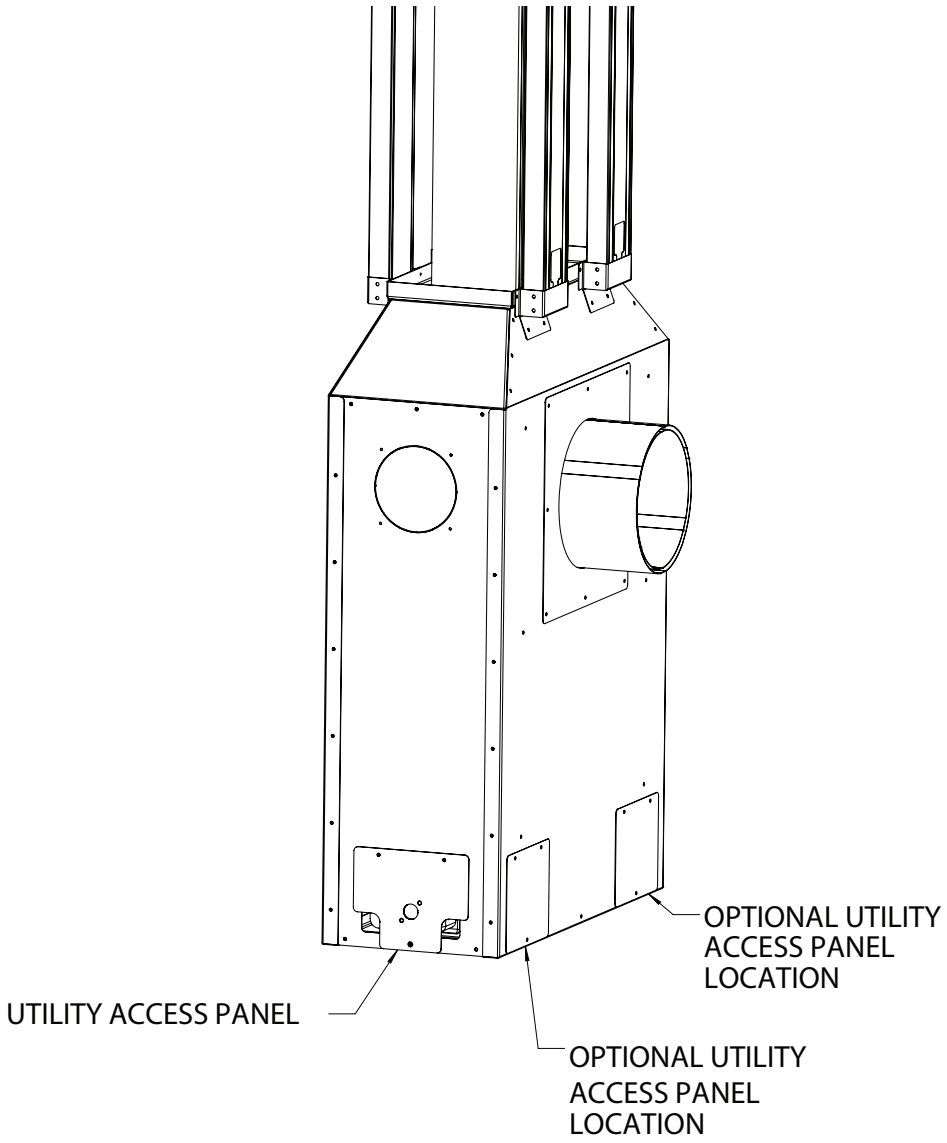

VENTING

The **SÓLAS ONE6** Slim-Line Built-In Gas Fireplace has been tested and listed for installation with 4" X 6 ⅝" Simpson DuraVent GS/Pro®, Selkirk Direct-Temp®, Security Secure Vent™, AmeriVent Direct™, Metal Fab DirectVent and ICC EXCELDirect venting components. Although you may use the pipe components (straight pipe, elbows, etc.) from any of the listed manufacturers, you may only use the vent terminations (caps) listed in the chart on page 18. For installations where a snorkel is needed, please note that only three snorkels are approved for use. Please plan your installation accordingly.

For all specific venting installation requirements, follow the installation instructions included by the venting manufacturer with the venting system components you have chosen.

Please Note:

- For venting configurations that include no vertical rise, a total horizontal equivalent vent run of up to 30 inches is allowed (when using a 45° elbow, 18 inches horizontal equivalent must be included). However, if your installation has room to add a vertical pipe section, we suggest adding at least one foot of vertical rise to the system.
- For venting configurations that include vertical rise, it is assumed that the installation will include at least one 90° elbow. Up to three additional 90° elbows (or equivalent 45° elbows) may also be used. The total venting may not exceed 20 feet of vertical rise and/or 10 feet horizontal run. Refer to the venting charts starting on pages 19 & 20 for specific details while you plan your installation. **Note: The number of elbows impacts the maximum allowable horizontal vent run.**
- Many installations will involve venting directly through standard 2 X 4 or 2 X 6 construction exterior wall to a horizontal vent termination (cap). The vent starter pipe has been designed to accommodate those two common installations without the use of any additional venting components other than a standard horizontal cap. See the chart on page 18 for a list of approved vent caps.
- A special corner installation kit (Part Number CK-26-1) is also available that will allow the ONE6 fireplace to be mounted in a corner without constructing a 45° partition wall. This kit is available from your SÓLAS dealer and has its own installation instructions. Please refer to those instructions for specific details regarding the installation using the kit.
- If the fireplace will be installed on an interior wall or other location that precludes venting directly through an outside wall to a horizontal vent cap, or if the distance to the outside wall exceeds 30", one or more elbows will be required to allow addition of the required vertical venting to the installation. When vertical venting is required, the fireplace venting may be terminated with either a vertical or horizontal vent cap depending on the specifics of the installation. Refer to the venting charts on pages 19 & 20 for specific venting requirements and see the chart on page 18 for a list of approved vent caps before you plan your installation.
- There should be a 1 ½" overlap of the vent and combustion air tubes, when telescopic joints are used.
- A minimum clear space of 1 ½" must be maintained around the vent pipe where it penetrates the first combustible wall adjacent to the fireplace (either the outside wall for the direct-through-the-wall installation or the partition wall for the 45° or other interior wall installations). The special vent pipe heat shields that are provided with the ONE6 must also be installed in the first wall adjacent to the fire-place. A minimum clear space of 1 ½" must also be maintained where the vent pipe penetrates any other interior wall, exterior wall, ceiling or roof.
- The ONE6 may also be installed in front of an exiting fireplace opening utilizing special co-linear venting components available from the venting manufacturers. These systems split and then recombine the co-axial air and exhaust and allow the use of flexible venting. This makes it easier to run the venting through the narrow fireplace damper opening to the top of the chimney. Refer to the vent manufacturers' instructions. Use the vertical venting column (0 feet Horizontal Run) in the venting charts to determine the required restrictor settings depending on the height of chimney.

USING THE VENTING CHARTS

The location of the vent termination must meet the requirements of the current edition of ANSI Z223.1/NFPA 54, National Fuel Gas Code or CAN B419.1, Natural Gas and Propane Installation Code and the requirements shown on page 24 of this manual.

APPROVED VENT TERMINATIONS	M&G DURAVENT GS/PRO	SELKIRK DIRECT- TEMP	SECURITY SECURE VENT	AMERIVENT DIRECT VENT	METAL FAB DIRECT VENT	ICC EXCEL DIRECT
VERTICAL CAP	46DVAVCH	1604802	SV4CGC	4DVC	4DVT	TM4VT
HORIZONTAL CAP	46DVAHC 46DVAHRCS 46DVAHSC	1604804	SV4GHC	4DHC	4DHT	TM4HT TM4DHT
SNORKEL	N/A	1604836	N/A	4D36C	N/A	TMST36

Just as with any other vented device, vertical vent rise creates draft (negative pressure) in the firebox as the exhaust gases heat up. If this draft becomes excessive, it can affect the performance or appearance of the fire. The ONE6 fireplace includes air and exhaust restrictors that are used to balance the draft in the fireplace to the optimal level for installations where excessive draft might occur. The venting charts on pages 19 and 20 provide an easy means for determining whether your specific installation requires inlet air or exhaust restrictors or both. To make the determination about whether air or exhaust restrictors are needed, a venting chart worksheet is provided on page 21. Follow the instructions and fill in the worksheet for your particular installation. This will allow you to determine the recommended restrictor settings for your exact installation. Although this might appear to be a complicated process at first glance, it is really quite straight-forward and the result will be a fire that looks and performs as intended. Several examples of worksheet calculations are shown on page 22 to help guide you.

Please be sure to note that:

1. There are separate venting charts for Natural Gas and LP Gas. Refer to the appropriate chart for your fuel type to determine your specific restrictor requirements. The settings in the charts have been deter-mined based on extensive testing.
2. Determine the total vertical vent rise and total horizontal vent run for your installation. All measure-ments are made from the center of the vent opening in the back of the fireplace.
3. If your fireplace will not be venting directly though an outside wall to a horizontal termination or if more than 30" of horizontal vent run is required, some vertical vent rise will be required for the fireplace to function and vent properly. Elbows will also be required for those installations. However, installations are limited to a maximum of four 90° elbows (or 45° elbow equivalents).
4. **Note:** Two 45° elbows equal one 90° elbow.
5. The recommended restrictor settings in the venting charts allow up to two 90° elbows (or 45° elbow equivalents) to be used without affecting the restrictor settings. Additional elbows will require that you calculate a new equivalent horizontal run for your installation to account for the additional flow re-sistance caused by the extra elbows. For the purposes of calculating the equivalent horizontal vent run, each additional 90° elbow is equivalent to three feet of horizontal vent run and each additional 45° elbow is equivalent to 1.5 feet of horizontal vent run. The total horizontal vent run including elbow equivalents can not exceed 10 feet.
6. The maximum vertical vent rise can not exceed 20 feet.
7. There are two exhaust restrictors that are provided with your fireplace. They are labeled “A” and “B”. The A restrictor provides less exhaust restriction than B.
8. An air restrictor plate is also provided with your fireplace. It is a ring with bendable tabs that can be set to adjust the amount of restriction in the air supply system. Once the appropriate number tabs are bent open (in accordance with the requirements for your installation), the plate is inserted between the fireplace and the vent starter pipe.

SÓLAS Self-Calibrating Power Vent Option Available for all SÓLAS Wall-Mount DV Models

Learn more @ solasfires.com

LP GAS VENT CHART

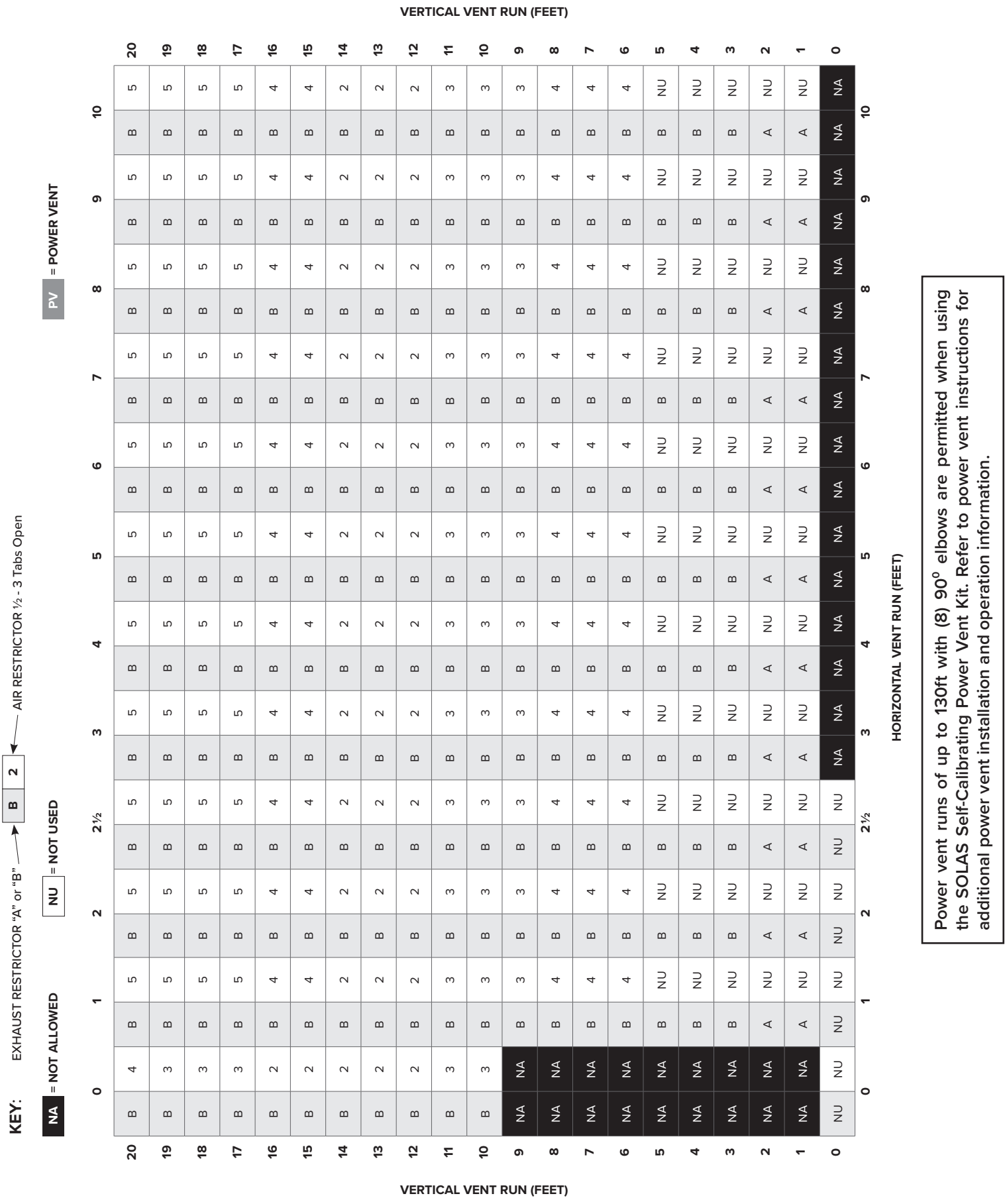

Power vent runs of up to 130ft with (8) 90° elbows are permitted when using the SOLAS Self-Calibrating Power Vent Kit. Refer to power vent instructions for additional power vent installation and operation information.

KEY: EXHAUST RESTRICTOR "A" or "B" → B | 2 ← AIR RESTRICTOR ½ - 3 Tabs Open

NA = NOT ALLOWED **NU** = NOT USED **PV** = POWER VENT

VERTICAL VENT RUN (FEET)	0		1		2		2½		3		4		5		6		7		8		9		10		VERTICAL VENT RUN (FEET)
20	B	4	B	NU	B	NU	B	NU	B	NU	B	NU	B	NU	B	NU	B	NU	B	NU	B	NU	B	NU	20
19	B	4	B	NU	B	NU	B	NU	B	NU	B	NU	B	NU	B	NU	B	NU	B	NU	B	NU	B	NU	19
18	B	4	B	NU	B	NU	B	NU	B	NU	B	NU	B	NU	B	NU	B	NU	B	NU	B	NU	B	NU	18
17	B	4	B	NU	B	NU	B	NU	B	NU	B	NU	B	NU	B	NU	B	NU	B	NU	B	NU	B	NU	17
16	B	4	B	NU	B	NU	B	NU	B	NU	B	NU	B	NU	B	NU	B	NU	B	NU	B	NU	B	NU	16
15	B	4	B	NU	B	NU	B	NU	B	NU	B	NU	B	NU	B	NU	B	NU	B	NU	B	NU	B	NU	15
14	B	NU	B	NU	B	NU	B	NU	B	NU	B	NU	B	NU	B	NU	B	NU	B	NU	B	NU	B	NU	14
13	B	NU	B	NU	B	NU	B	NU	B	NU	B	NU	B	NU	B	NU	B	NU	B	NU	B	NU	B	NU	13
12	B	NU	B	NU	B	NU	B	NU	B	NU	B	NU	B	NU	B	NU	B	NU	B	NU	B	NU	B	NU	12
11	B	NU	B	NU	B	NU	B	NU	B	NU	B	NU	B	NU	B	NU	B	NU	B	NU	B	NU	B	NU	11
10	B	NU	B	NU	B	NU	B	NU	B	NU	B	NU	B	NU	B	NU	B	NU	B	NU	B	NU	B	NU	10
9	NA	NA	B	NU	B	NU	B	NU	B	NU	B	NU	B	NU	B	NU	B	NU	B	NU	B	NU	B	NU	9
8	NA	NA	B	NU	B	NU	B	NU	B	NU	B	NU	B	NU	B	NU	B	NU	B	NU	B	NU	B	NU	8
7	NA	NA	B	NU	B	NU	B	NU	B	NU	B	NU	B	NU	B	NU	B	NU	B	NU	B	NU	B	NU	7
6	NA	NA	B	NU	B	NU	B	NU	B	NU	B	NU	B	NU	B	NU	B	NU	B	NU	B	NU	B	NU	6
5	NA	NA	B	NU	B	NU	B	NU	B	NU	B	NU	B	NU	B	NU	B	NU	B	NU	B	NU	B	NU	5
4	NA	NA	B	NU	B	NU	B	NU	B	NU	B	NU	B	NU	B	NU	B	NU	B	NU	B	NU	B	NU	4
3	NA	NA	B	NU	B	NU	B	NU	B	NU	B	NU	B	NU	B	NU	B	NU	B	NU	B	NU	B	NU	3
2	NA	NA	A	NU	A	NU	A	NU	A	NU	A	NU	A	NU	A	NU	A	NU	A	4	A	4	A	4	2
1	NA	NA	A	NU	A	NU	A	NU	A	NU	A	NU	A	NU	A	NU	A	NU	A	4	A	4	A	4	1
0	NU	NU	NU	NU	NU	NU	NU	NU	NA	NA	NA	NA	NA	NA	NA	NA	NA	NA	NA	NA	NA	NA	NA	NA	0
	0		1		2		2½		3		4		5		6		7		8		9		10		

HORIZONTAL VENT RUN (FEET)

Power vent runs of up to 130ft with (8) 90^0 elbows are permitted when using the SOLAS Self-Calibrating Power Vent Kit. Refer to power vent instructions for additional power vent installation and operation information.

VENTING WORKSHEET FOR INSTALLER

Use this worksheet to determine the equivalent horizontal run for use with the vent charts on pages 19 and 20. The information contained within this worksheet may also be useful during installation or in the event that you need technical assistance from SÓLAS.

NOTE: Calculations for horizontal or vertical sections of pipe are measured between transition joints as shown in the image below.
Vent runs that are not 90° vertical are considered to have horizontal run but not a vertical rise.

NOTE: Snorkel terminations are counted as (2) 90° elbows.

A. **TOTAL VERTICAL VENT RISE:** Measured as total vertical distance between flanges of elbows used in vent system. (See Diagram) _____ Feet

B. **TOTAL HORIZONTAL VENT RUN:** Measured as total horizontal distance between flanges of elbows used in vent system. (See Diagram) _____ Feet

C. **TOTAL NUMBER OF 90° ELBOWS in excess of 1**: _____ **= "C"**
NOTE: Snorkel terminations are counted as (2) 90° elbows

D. **TOTAL NUMBER OF 45° ELBOWS in excess of 1: _____ = "D"**

E. **90^0 Elbow Horizontal Equivalent: C x 3** = _____

F. **45^0 Elbows Horizontal Equivalent: D x 1.5** = _____

G. **Total Horizontal Equivalent: B + E + F =** _____

NOTE: Prior to enclosing the wall cavity, test fire the fireplace to ensure it is fully operational.

VENTING CHART WORK SHEET EXAMPLES

EXAMPLE 1 – ONE6 Slim-Line Built-In

A. Total Vertical Vent Rise: **1** feet

B. Total Horizontal Vent Run: **5** feet

C. Total Number of 90° Elbows in excess of 1: **1**

(Snorkel terminations are counted as (2) 90° elbows)

D. Total Number of 45° Elbows in excess of 1: **0**

E. 90^0 Elbow Horizontal Equivalent: C x 3 = **3**

F. 45^0 Elbow Horizontal Equivalent: D x 1.5 = **0**

G. Total Horizontal Equivalent: B + E + F = **8**

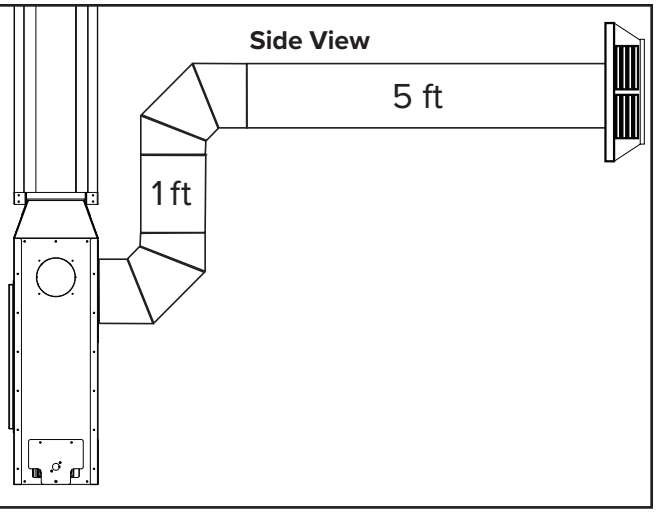

EXAMPLE 2 – ONE6 Slim-Line Built-In

A. Total Vertical Vent Rise: **0** feet

B. Total Horizontal Vent Run: **2** feet

C. Total Number of 90° Elbows in excess of 1: **0**

(Snorkel terminations are counted as (2) 90° elbows)

D. Total Number of 45° Elbows in excess of 1: **0**

E. 90^0 Elbow Horizontal Equivalent: C x 3 = **0**

F. 45^0 Elbow Horizontal Equivalent: D x 1.5 = **0**

G. Total Horizontal Equivalent: B + E + F = **2**

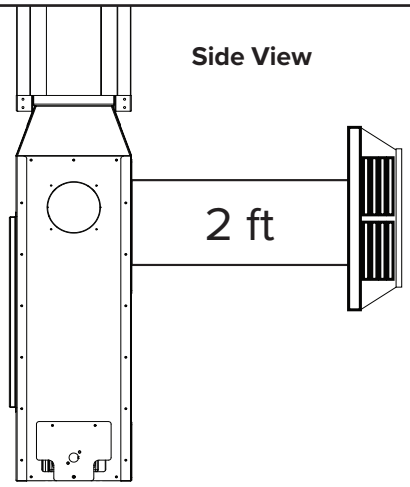

EXAMPLE 3 – ONE6 Slim-Line Built-In

A. Total Vertical Vent Rise: **0** feet

B. Total Horizontal Vent Run: **4** feet

C. Total Number of 90° Elbows in excess of 1: **1**

(Snorkel terminations are counted as (2) 90° elbows)

D. Total Number of 45° Elbows in excess of 1: **0**

E. 90^0 Elbow Horizontal Equivalent: C x 3 = **3**

F. 45^0 Elbow Horizontal Equivalent: D x 1.5 = **0**

G. Total Horizontal Equivalent: B + E + F = **7**

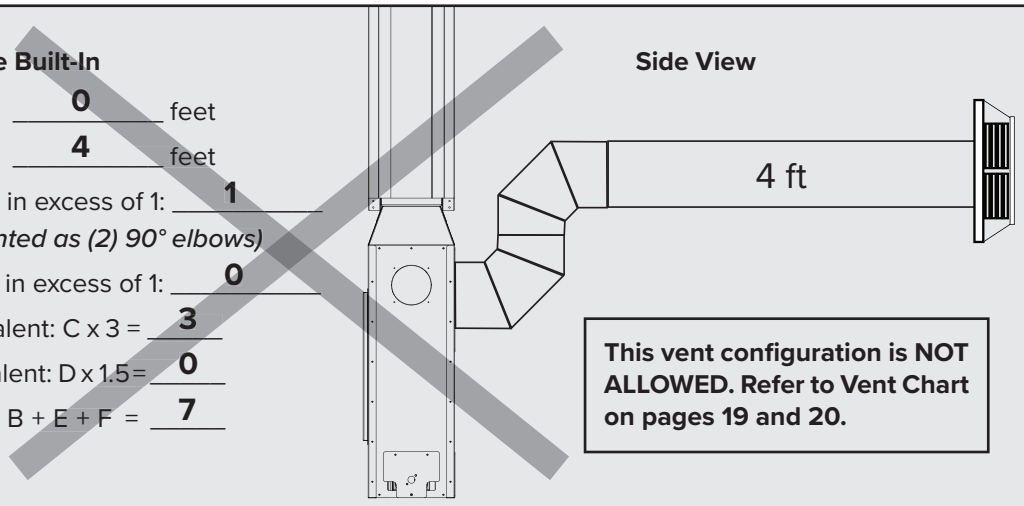

This vent configuration is NOT ALLOWED. Refer to Vent Chart on pages 19 and 20.

The illustration below shows some of the many ways the ONE6 fireplace may be installed in the home. This includes interior and exterior wall installations, corner installations and horizontal and vertical vent terminations.

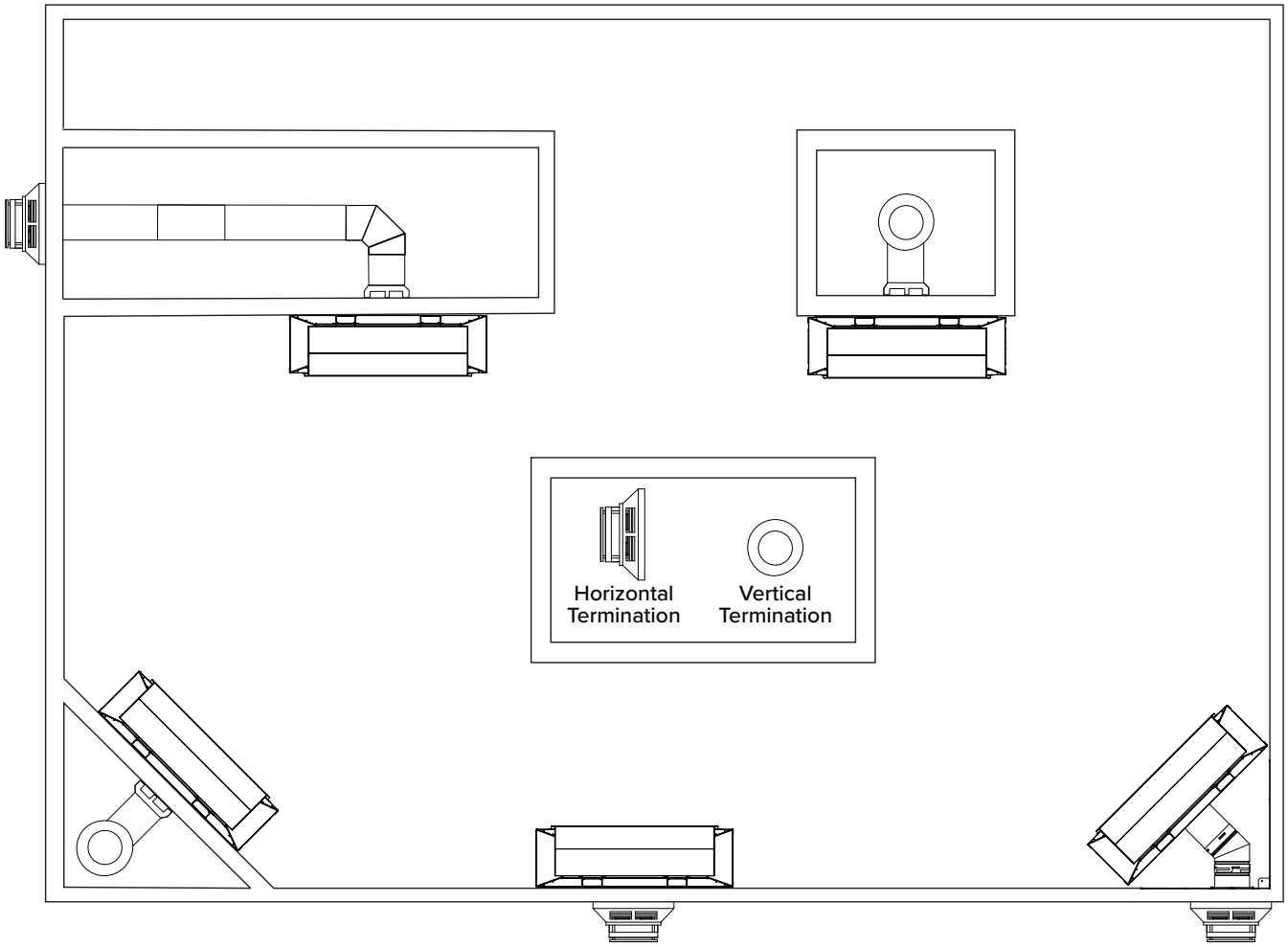

Power vent runs of up to 130ft with (8) 90^{0} elbows are permitted when using the SOLAS Self-Calibrating Power Vent Kit. Refer to power vent instructions for additional power vent installation and operation information.

VENTING

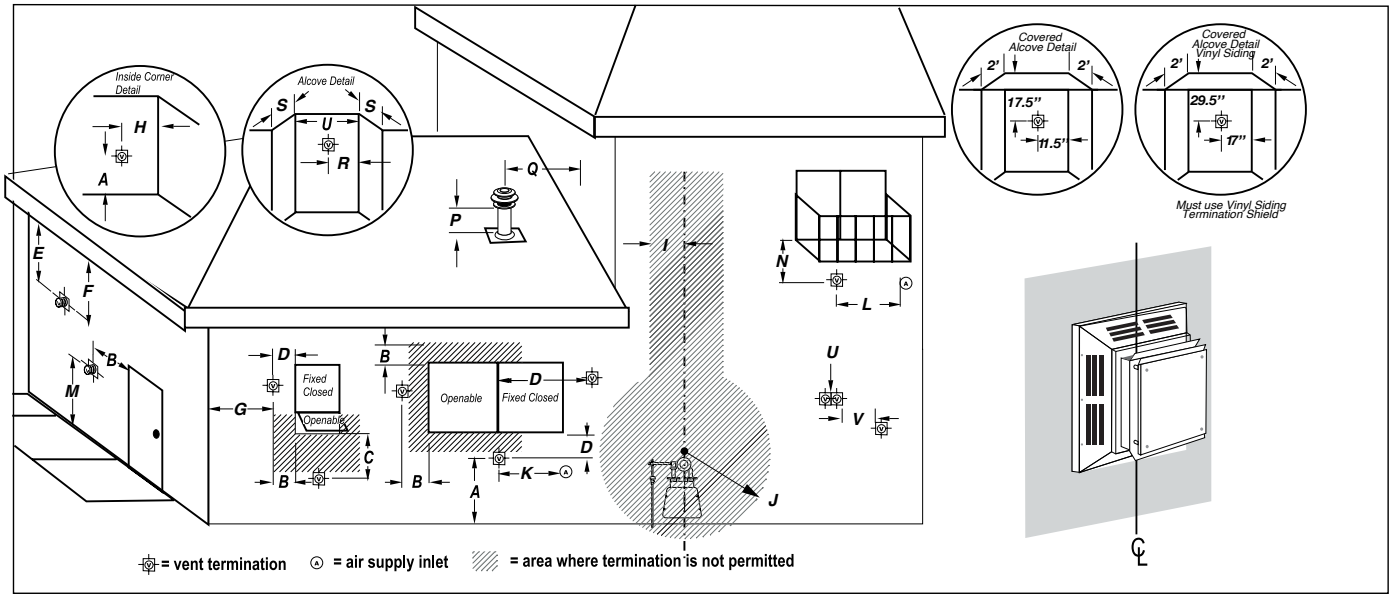

VENT TERMINAL LOCATIONS	CANADA*	U.S.A.**
A = Clearance to the termination frame above grade, veranda, porch, deck, or balcony	12" (30 cm)	12" (30 cm)
B = Clearance to top of doors or operable windows	12" (30 cm)	12" (30 cm)
C = Clearance to sides or bottom of door or operable windows	12" (30 cm)	9" (23 cm)
D = Clearance to permanently closed window, recommended to prevent condensation	16" (41 cm)	16" (41 cm)
E = Clearance to ventilated soffit located within a horizontal distance to 24" (61 cm) from centerline of termination	22" (56 cm)	22" (56 cm)
F = Clearance to unventilated soffit	30" (76 cm) to combustibles 16" (41 cm) to non-combustible	30" (76 cm) to combustibles 16" (41 cm) to non-combustible
G = Clearance to outside corner	9" (23 cm)	9" (23 cm)
H = Clearance to inside corner	12" (30 cm)	12" (30 cm)
I = Clearance to each side of the vertical centerline of a meter or regulatory assembly to a maximum vertical distance of 15ft (4.5m)	36" (91 cm)	36" (91 cm)
J = Clearance to service regulator vent outlet	36" (91 cm)	36" (91 cm)
K = Clearance to non-mechanical air supply inlet to the building or combustion air inlet to other appliance for appliance <=100.000 BTU/H (30 KW)	12" (30 cm)	12" (30 cm)
L = Clearance to forced air supply inlet	72" (183 cm)	36" (91 cm) above air inlet
M = Clearance above paved sidewalk or paved driveway located on public property	84" (213 cm)	84" (213 cm)
N = Clearance under veranda, porch, deck, or balcony	22" to combustibles 16" to non-combustibles	22" to combustibles 16" to non-combustibles
P = Clearance above roof	24" (61 cm)	24" (61 cm)
Q = Clearance to adjacent walls and neighboring buildings	24" (61 cm)	18" (46 cm)
R = Clearance from corner in recessed location	12" (30 cm)	12" (30 cm)
S = Maximum depth of recessed location	48" (122 cm)	48" (122 cm)
T = Maximum width for back wall of recessed location	24" (61 cm)	24" (61 cm)
U = Horizontal clearance between two terminations that are level	0	0
V = Horizontal clearance (center to center) between two terminations that are not level	18" (46 cm)	18" (46 cm)

Note 1: For N a vent shall not terminate directly above the sidewalk or paved driveway which is located between two single-family dwellings and serve both dwellings.
Note 2: For P only permitted if veranda, porch, deck, or balcony is fully open on a minimum of two sides beneath the floor.
Note 3: For J, K, and as specified in CGA B149 installation co de. Local codes or regulations may vary.
* Based on CGA B149.1 Natural Gas and Propane installation code. Local codes may vary, please check with local regulatory agency.
**** Based on ANSI Z223.1/NFPA 54 National Fuel Gas Code. Local codes may vary, please check with local regulatory agency.**

NOTICE: Venting terminations shall not be recessed into a wall or siding.

UNPACKING THE ONE6 SLIM-LINE BUILT-IN FIREPLACE

The fireplace is shipped on a pallet. The venting components are in one carton. Start with the carton that contains the vent starter pipe, vent heat shields and air and exhaust restrictors.

1. Before beginning, locate the ONE6 Slim-Line Built-In Vent Adapter kit.

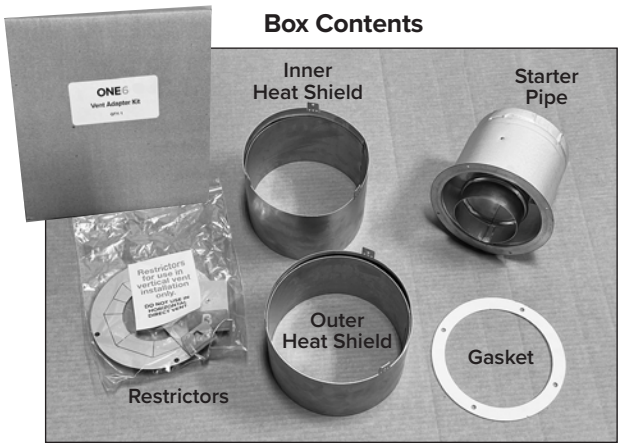

2. Using a 5⁄16” nut driver, remove the 8x #10 sheet metal screws from the outer can vent access panel.

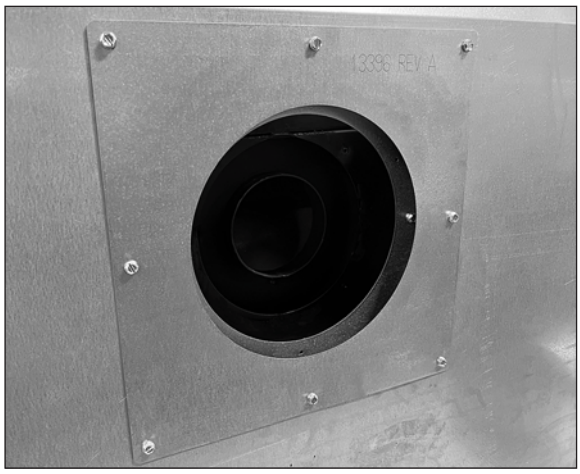

3. Using a 5/16” nut driver, remove the 6x #10 sheet metal screws from the firebox heat shield access panel.

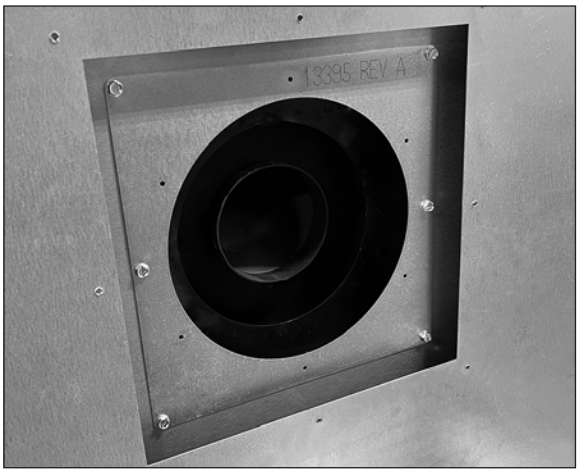

4. At this point, it is necessary to determine whether your installation will require the addition of flow restrictors for the combustion air inlet system, the exhaust outlet, or both. Refer to the applicable vent chart for your gas type and vent configuration on pages 19 & 20, if an air restrictor is required for your vent configuration, prepare the air restrictor now. Identify on the appropriate vent chart the number of tabs to open on the air restrictor and do so now by breaking and discarding these tabs.

5. Place the vent starter gasket on the back of the firebox, it may be helpful to apply 3 or 4 very small dabs of high temperature (500F) silicone (RTV) to hold the gasket in place while continuing with the installation.

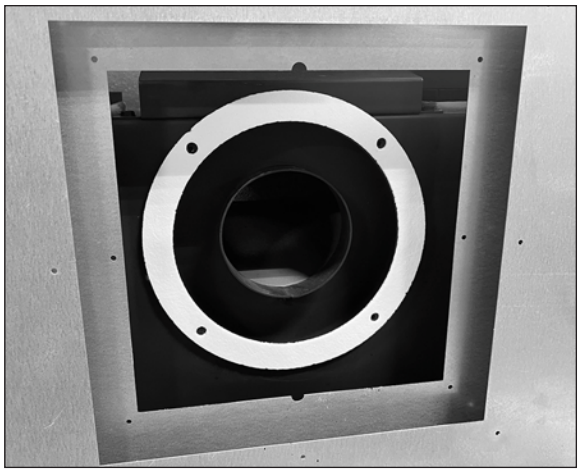

6. The exhaust restrictor is installed by placing it through the exhaust outlet pipe and resting it on the internal baffle in the firebox. It is held in place with a movable retainer clip. Simply hold the restrictor down against the baffle and push the retainer up and tighten screw to secure the restrictor. **Note: Please take care to ensure that the exhaust restrictor is centered in the exhaust outlet. Improper alignment could adversely affect the appearance of the flames. Refer to the adjacent images for placement of the exhaust restrictor.**

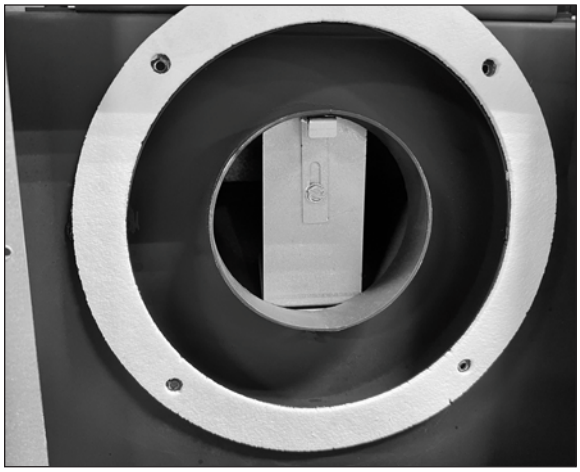

7. Place the Air restrictor between the gasket and the vent starter pipe. Using a 5⁄16” nut driver, secure the vent starter pipe using 4x #10 sheet metal screws provided.

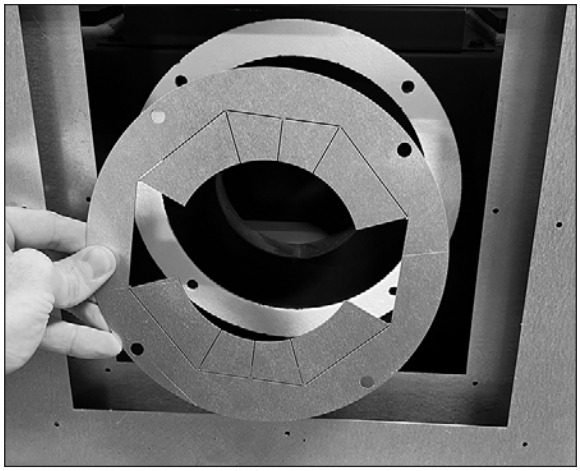

8. Locate the firebox heat shield access panel removed during step #3 on page 25. To install the inner heat shield, align the three tabs with the 3 pilot holes in the firebox heat shield access panel. Using a 5⁄16” nut driver, secure the inner heat shield using 3x #10 sheet metal screws provided. (add picture)

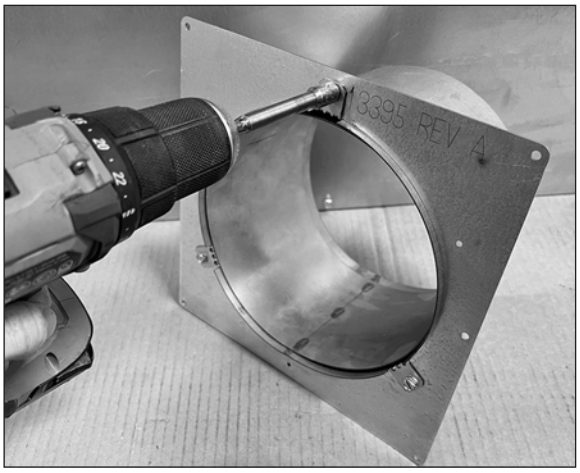

9. Install the outer heat shield, align the three tabs with the 3 pilot holes in the firebox heat shield access panel. Using a 5⁄16” nut driver, secure the outer heat shield using 3x #10 sheet metal screws provided.

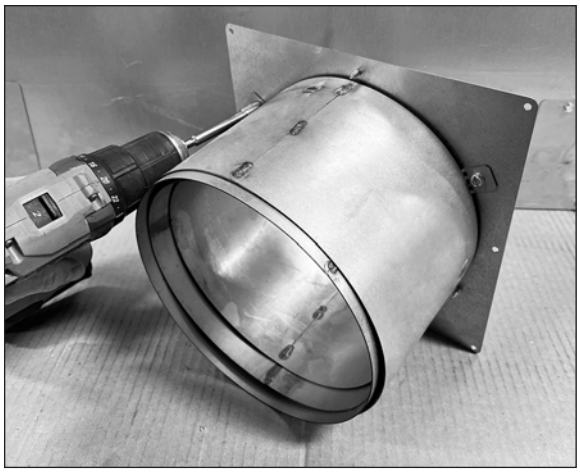

10. Using a 5⁄16” nut driver, reinstall the outer can vent access panel using the 8x #10 sheet metal screws saved from step #2 on page 25.

The Starter pipe and required telescoping heat shields are now installed, the unit is ready for the next step of the installation.

ATTENTION
Once the unit is installed, test burn the fireplace for at least 30 minutes to confirm that the unit is performing as expected before enclosing the unit within the wall while the vent pipe is still accessible. Failure to test burn the fireplace may result in costly repairs not covered by the manufacturer’s warranty.

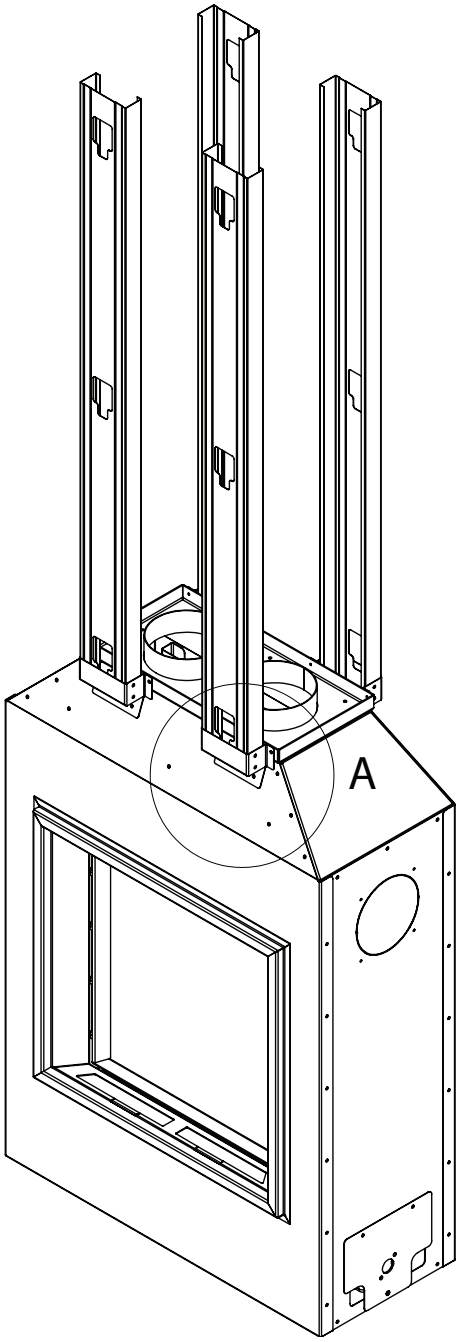

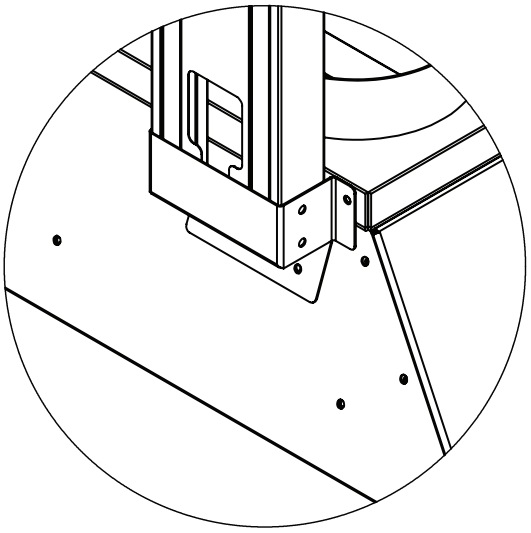

DETAIL A

12. Place the unit in position within the combustible framing shown on page 12. The 2x4 steel studs (not included) will be installed next. The stud length, dimensions “G” on page 10 can be calculated using either of the following equations:

    Stud Length Equation:

    English (inches): Stud Length G = A – 38.5"

    Metric (millimeters): Stud Length G = A – 978mm

    *Refer to page 10 for Dimension “G” referenced in the above equations.

13. Once the studs have been cut to length, insert the studs fully in the collector stud brackets as shown in “Detail A” above, secure with (4) #10 self-drilling sheet metal screws per stud.

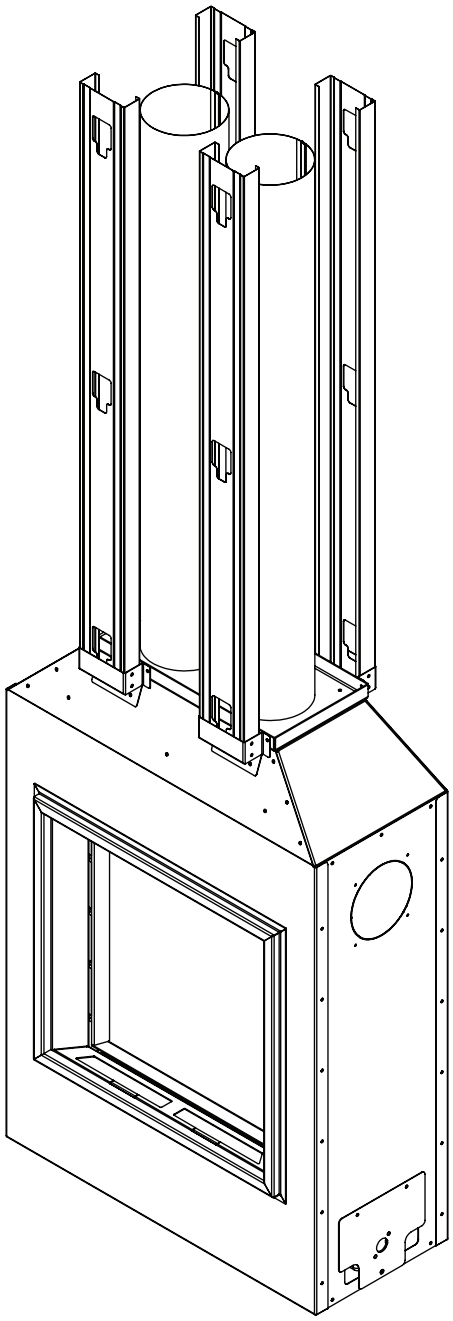

14. The 5” diameter flex duct will now be installed. The duct length can be calculated using either of the following equations:

    Duct Length Equation:

    English (inches): Duct Length = G – 35.0"

    Metric (millimeters): Duct Length = G – 889mm

    *Refer to step 3 for Dimension “G” referenced in the above equations.

15. Once the duct length has been calculated, stretch the ducts to the length calculated in step #5 and secure to the collector using the 5” hose clamps provided.

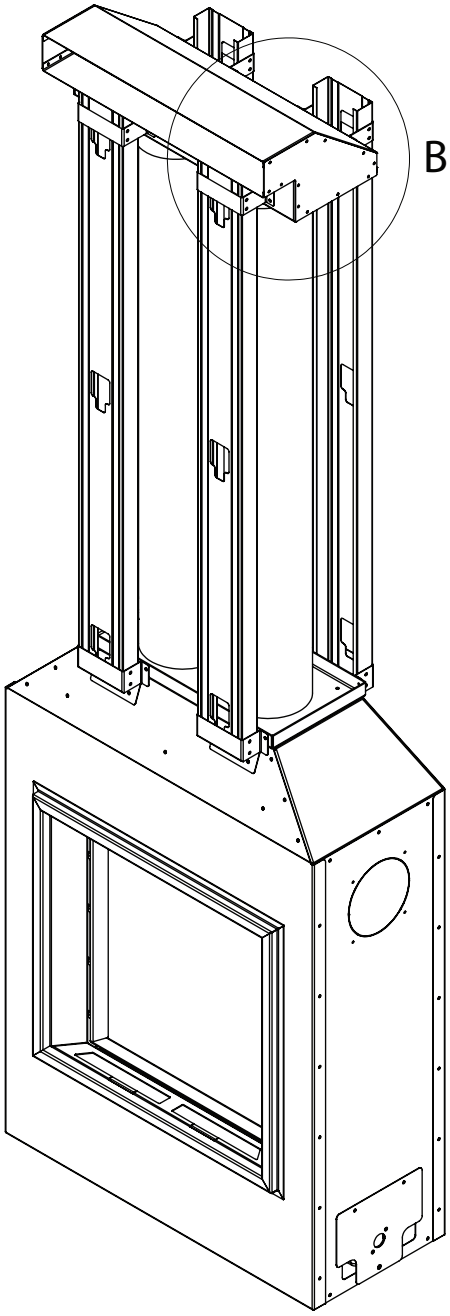

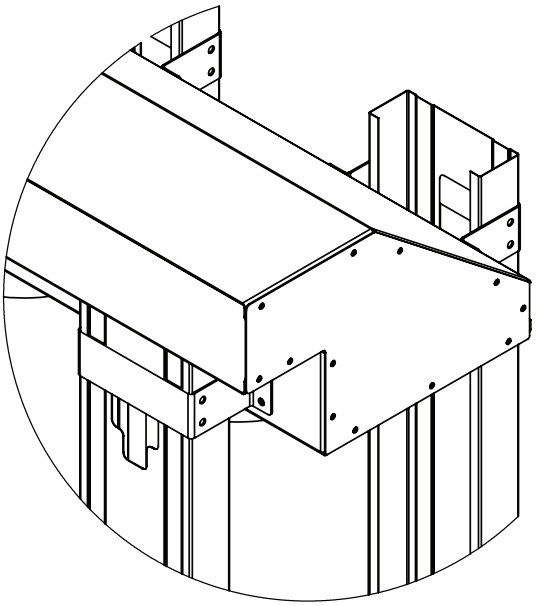

DETAIL B

16. Install the plenum as shown below, the front studs will be inserted into the plenum stud brackets until they make contact with the plenum (as shown in “Detail B”). Secure the front studs to the plenum stud brackets using the (4) #10 self-drilling sheet metal screws per stud provided.

17. Once the front studs have been secured to the plenum, confirm that the plenum is level front to back and side to side. Once the plenum is level, secure the rear studs to the plenum stud brackets using the (4) #10 self-drilling sheet metal screws per stud provided.

18. Once the plenum has been installed, connect the ducts to the plenum and secure to the collector using the 5” hose clamps provided.

19. Once the unit has been enclosed within the wall the “Plenum Outlet Trim” will be press fit into the plenum outlet opening. Apply some high temperature RTV/silicone during the installation of the “Plenum Outlet Trim” to insure it is secured in place.

Installing the Outer Vent Heat Shields and Vent Termination (Parallel Installation on Outside Wall)

20. Before you install the horizontal vent termination, you must first install the second halves of the two telescoping vent pipe heat shields. Each shield half simply slips over the half you previously attached to the fireplace mounting plate and can now be seen inside the vent pass-through in the wall.

21. Install the outer shield first and the inner second. Leave about 1-¼" of the shields protruding past the house sheathing.

22. Install the horizontal vent termination (vent cap). Be sure the arrow on the cap (if present) is pointing up and reconfirm that all the vent cap location requirements per pages 23-24 and the vent manufacturers requirements are met.

23. Slip the inner and outer vent termination pipes onto the vent starter pipe taking care to align the inner and outer pipes to prevent damage.

24. Slide the vent termination (cap) into the siding recess (or vinyl siding shield) until it bottoms out. **Note: The rear surface of the vent termination will push the telescoping vent pipe heat shields inward. When the vent termination is in place the heat shields will just touch the rear surface of the termination.**

25. Pull the vent cap away from the sheathing and install a small bead of non-hardening silicone sealer around the cap perimeter. Push the cap in place.

26. Install the mounting screws (included with the cap) to hold the vent cap to the sheathing See the venting manufacturers instructions for the location of the mounting holes. Typical mounting hole locations are shown in the adjacent photo. See the venting manufacturers instructions for more information or if using the vinyl siding shield.

Installing the Outer Vent Heat Shields (Partition Wall Installation)

1. Before you install the additional vent pipe and elbow(s) that will complete the venting installation, you must first install the second sections of the vent pipe heat shields to protect the combustible materials around the vent pipe pass-through in the partition wall that the fireplace is mounted on. Each shield half simply slips over the half you previously attached to the fireplace mounting plate and that can now be seen inside the vent pass-through in the partition wall.
2. Install the outer shield first and the inner second. Leave at least 2" of both shields protruding past the partition wall framing or wall covering. See the photo on page 31.

Vent Pipe and Vent Termination Installation (Partition Wall Installation)

1. The specific details of the vent configuration from the vent starter pipe on the fireplace to the horizontal or vertical vent termination (cap) when the fireplace is installed on an interior wall of the house will vary depending on the location of the fireplace on the wall, what is on the back side of the wall, where the vent termination will be located (roof or exterior wall) and on other code requirements for the location of the vent termination as shown page 23-24. However, the maximum vent length, measured along the centerline of the pipe, from the back of the fireplace to the start of the vent termination cannot exceed 30 feet, including a maximum of 20 feet of vertical rise and a maximum of 10 feet of horizontal run. If more than two 90° elbows (or equivalent 45° elbows) are needed for your installation, the maximum amount of horizontal run allowed is reduced. See the venting section starting on page 17 for specific information. It is important to plan the installation in advance so that you can accurately locate the any wall or ceiling pass-throughs and the vent termination on the exterior wall or roof. The vent pipe sections are available only in certain increments of length and in adjustable length sections. Plan carefully before you start!
2. You will find it helpful to leave access to the area behind the partition wall to facilitate installation of the vent components. The pipe sections may have twist lock connections which will be difficult to execute without good access.
3. Be sure that the two vent pipe heat shields extend at least 2" beyond the rear side of the partition wall adjacent to the fireplace after the venting is installed.
4. Maintain a minimum 1 ½" unobstructed air space around the vent pipe where it passes through other interior walls, the ceiling, the exterior wall or the roof.
5. **Note:** Vent manufacturer's instructions and some building codes may require the addition of blocking above and below all wall pass-throughs, the addition of vent manufacturer supplied fire-stops, wall thimbles, attic insulation shields, interior trim collars, vent support brackets, or other components. Please check with the authority having jurisdiction in your area when planning the venting installation to determine the specific code requirements and exact venting components that are required for your installation.

PLACING THE BURNER GLASS MEDIA

The burner glass media poly-bag that you set aside when you unpacked the fireplace contains the correct amount of glass material to cover the burner. DO NOT add any additional media to the media supplied with your fireplace. The entire contents of the bag should be evenly distributed over the burner tray.

1. Locate the burner in the fireplace. Refer to the adjacent illustration.
2. Carefully clip one corner of the poly-bag to form a pouring spout. The opening should be large enough to allow the glass media to flow but not so large that you can't control the flow.
3. You will notice that the burner surface is designed with turned-up edges that form a tray to hold the glass media.
4. Starting at one end, pour the glass media onto the burner tray, keeping the pouring spout on the poly-bag toward the center of the burner to avoid spillage of glass pieces over the sides of the burner. See the adjacent illustrations.
5. Once you have poured all of the glass burner media into the burner tray, carefully smooth the glass pieces out so they have a uniform depth over the entire surface of the burner. When the burner glass media is properly placed, it should look like the images here on the right.

Note: If a few pieces of glass escape over the edges of the burner tray during installation, it is not a problem. They will simply land in the area below the burner and will do no harm.

Burner Tray

Burner Glass Media – Partially Installed

Burner Glass Media – Fully Installed

Optional Birch Log Set Available

Refer to separate Log Set Manual for assembly.

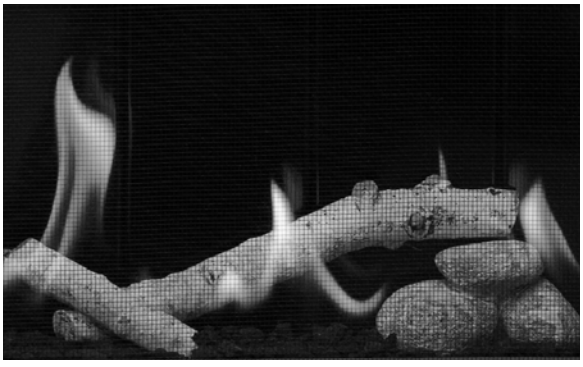

Removing the Glass Assembly

1. Use the pull tabs on the air screen to pull it up and out of the fireplace.

2. Lift the Left Side Panel up and into the fireplace opening to remove it. Then lift the Right Side panel up and into the fireplace opening to remove it.

3. The (10) Philips head screws that retain the screen will now be exposed, using a Philips head screwdriver, remove these screws.

4. Once the (10) Philips screws are removed, lift the screen up, then tilt the bottom out of the fireplace to remove.

5. Remove the (3) ¼-20 bolts (see arrows) along the top of the glass frame using a 7⁄16" socket.

(Fireplace enclosure front removed to show glass frame hardware)

6. Once the (3) ¼-20 bolts have been removed, lift the glass frame up, then tilt the bottom out of the fireplace to remove using the same motion as was used with the screen.

Reverse these steps to reinstall the glass and screen assembly.

ATTENTION!

Once the unit is installed, test burn the fireplace for at least 30 minutes to confirm that the unit is performing as expected before enclosing the unit within the wall while the vent pipe is still accessible. Failure to test burn the fireplace may result in costly repairs not covered by the manufacturer's warranty.

FIRST FIRE INSTRUCTIONS

When operating your new fireplace for the first time, some vapors may be released due to the curing compounds used in the manufacture of the appliance. They may cause a slight odor and could cause the flames to be the full height of the firebox, or even slightly higher, for the first few hours of operation. It is possible that these vapors could set off smoke detection alarms in the immediate vicinity. These vapors are quite normal on new appliances. We recommend opening a window to vent the room during the burn off period. After a few hours use, the vapors will have disappeared and the flames will be at their normal height.

Follow these instructions for a successful first fire;

1. Turn the fireplace on in Manual Mode.
2. Set flame height to HI.
4. Let the fireplace run for **3 hours** at this setting then shut off fireplace and let it cool.
5. After the fireplace cools, turn the fireplace on in manual mode with flame on HI.
6. Allow fireplace to run for **6 hours** in this setting.

NOTE: Slight Odors may still be noticed on future uses of the fireplace but will diminish over time. The type of finishing materials used around the fireplace may add odors or add to the curing time. If the fireplace has not been used in several months, it is normal for odors to occur caused by lint or dust that has settled on the unit while not in use.

FLAME SUPERVISION DEVICE

For your safety, this appliance is fitted with a flame supervision device which will shut-off the gas supply if, for any reason, the pilot flame goes out. This device incorporates a fixed probe, which senses the heat from the pilot flame. If the probe is cool, the device will prevent any gas flow unless manually lighting the pilot. See full lighting instructions.

NOTE: Periodically conduct a visual check to ensure the pilot and burner flames are as shown (top of page 37).

During extreme cold weather, it is recommended that you leave the pilot running to prevent condensation forming in the firebox and on the glass viewing area during startup.

LIGHTING, OPERATION & RATING INFO

The Lighting, Operation and Rating information is located on a plate in front of the Gas Valve Assembly inside the front face of the fireplace.

To access the plate, remove lower air trim panel as shown in step 1 on page 34.

⚠ WARNING

DO NOT ATTEMPT TO TOUCH THE DATA PLATE WHILE THE FIREPLACE IS STILL HOT!
Let the fireplace cool first before touching it.

SERVICING

If any attention is required for your appliance, contact your dealer quoting the model number and serial number. This number is on the rating plate, which is located adjacent to the control module. The replacement parts are shown at the end of this manual. Please always quote the part number and description when requesting spare parts. Warranty is void if serviced by a non-qualified technician.

FIREPLACE CONTROL DEVICES

There are two ways to control your fireplace.

1. SÓLAS One-Touch Remote **(S-507)**

2. Optional Wall Touch Pad **(WTP-1500)**

The SÓLAS One-Touch Remote can be programmed to function automatically—see pages 40-45.

The Optional Wall Touch Pad can be used to turn the flame on, off, and to increase or decrease the flame height.

NOTE: The SÓLAS One-Touch Remote in the AUTO mode will override the Wall Touch Pad.

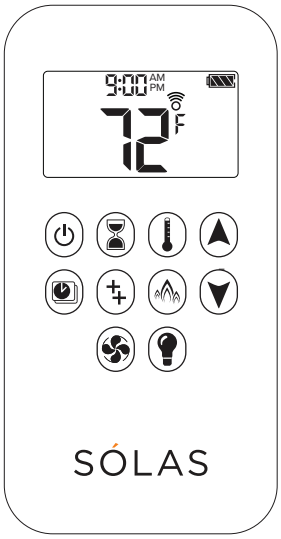

SÓLAS One-Touch Remote **Part #S-507**

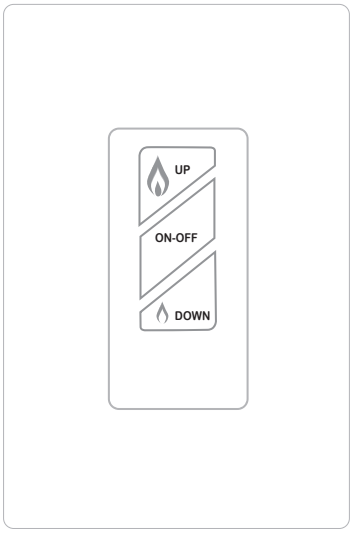

Wall Touch Pad Part #WTP-1500 (Optional)

NOTE: The Wall Touch Pad is not compatible with the SÓLAS Self-Calibrating Power Vent System.

WARNING: If you do not follow these instructions exactly, a fire or explosion may result causing property damage, technicianal injury or loss of life.

When lighting this appliance, follow instructions exactly.

A. This appliance is equipped with an ignition device that automatically lights the pilot. Do not try to light the pilot by hand.

B. BEFORE OPERATING THE BURNER SYSTEM, smell around the appliance area for gas. Be sure to smell next to the floor because some gas is heavier than air and will settle on the floor.

WHAT TO DO IF YOU SMELL GAS

- Do not try to light the appliance.
- Do not touch any electric switch; do not use any telephone in your building.
- Immediately call your gas supplier from a neighbor's telephone. Follow the gas supplier's instructions
- If you cannot reach your gas supplier, call the fire department.

C. Use only your hand to operate the gas controls. Never use tools. If a knob will not push in or turn by hand, don't try to repair it, call a qualified service technician. Force or attempted repair may result in a fire or explosion.

D. Do not use this appliance if any part has been under water. Immediately call a qualified service technician to inspect the appliance and to replace any part of the control system which has been under water.

OPERATING INSTRUCTIONS

1. STOP! Read the safety information above on this label.
2. This appliance is equipped with an ignition device that automatically lights the pilot. Do not try to light the pilot by hand.
3. Confirm that the remote LCD display says "OFF". Visually check there is no pilot flame visible inside the fireplace.
4. Wait five (5) minutes to clear out any gas. Then smell for gas including near the floor. If you smell gas, STOP! Follow "B" in the safety information above. If you don't smell gas, proceed to step 5.
5. Using either the Remote or the optional Wall Touch Pad, press and hold the "ON/OFF" button for 4 seconds. An audible signal confirms the start sequence has begun.
6. Continuing beeps confirm the ignition is in process. Once lighting the pilot flame should appear as shown below. Once the pilot is confirmed, the main burner ignites on high.

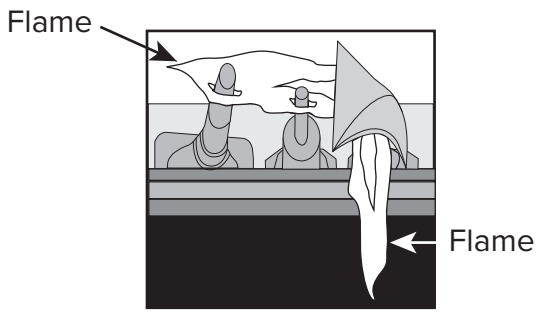

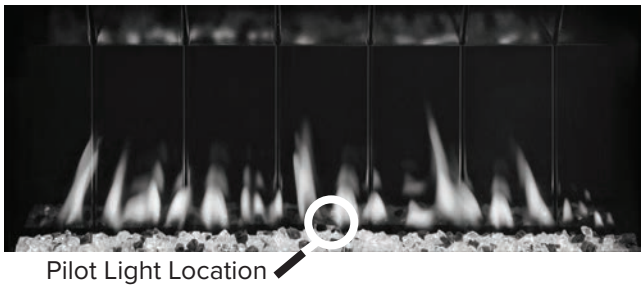

NOTE: If the pilot does not stay lit after several tries, proceed to step 9.

7. Use the flame height adjustment buttons on either the Remote or the optional Wall Touch Pad to adjust the flame. To increase flame height, press and hold ▲. To decrease flame height, press and hold ▼.
8. Press and hold the ▼ button on the Remote or optional Wall Touch Pad to set the appliance to Pilot flame only.
9. If the appliance will not operate, follow the instructions "TO TURN OFF GAS TO THE APPLIANCE" and call your gas service technician or gas supplier.

TO TURN OFF GAS TO THE APPLIANCE

1. To turn off gas to the appliance, push and release the "OFF" button on either the Remote or the optional Wall Touch Pad. An audible signal will confirm.
2. TO TURN OFF THE GAS SUPPLY TO THE APPLIANCE, close the shut-off valve on the gas supply line to the appliance.

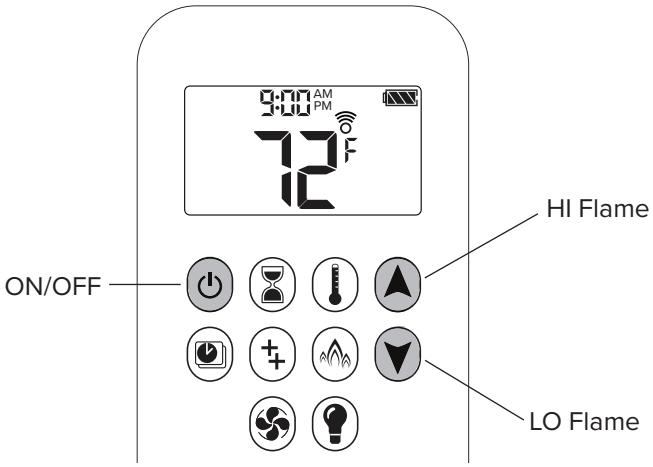

SÓLAS ONE-TOUCH REMOTE PAIRING SET-UP

The Control Module and the Remote must be paired before the first use. This has been completed for you at the factory. Refer to the section below if the Control Module and Remote lose synchronization.

1. Insert two AAA alkaline batteries in the Remote. Only use brand name alkaline batteries, such as Duracell or Energizer.
2. Four AA alkaline batteries are installed in the Control Module (shown below).
3. Locate the RESET button on the front side of the Control Module.
4. Press and hold the Control Module's RESET button until you hear one short beep and one long beep. After the second beep, release the reset button.
5. Within the subsequent 20 seconds, press and hold the ▼ button on the Remote for 2-3 seconds. CONN will be displayed and flash on the Remote during the pairing sequence. The Remote will count up from 1 to 8, and you will hear two short beeps confirming the pairing is complete.

If you hear one long beep, the pairing sequence has failed or the wiring is incorrect.

This is a one time pairing and is not required when changing the batteries of the Remote or Control Module. The remote control system is now ready to use.

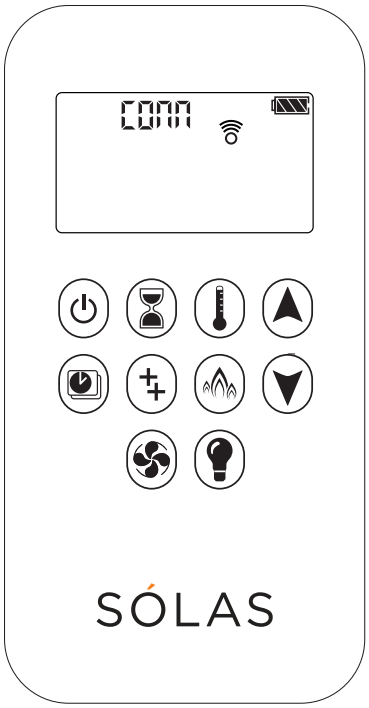

SÓLAS One-Touch
Programmable
Thermostatic Remote
Part #S-507

RESET Button

NOTE: The batteries in your SÓLAS One-Touch remote control and control module are to be replaced annually.

SÓLAS One-Touch
Control Module
Part #S-504

HOW TO TURN YOUR FIREPLACE OFF
(INCLUDING PILOT)

Familiarize yourself with each of these methods before operating your fireplace.

Remote and Wall Touch Pad: Press and hold the ON-OFF button for a second (either on the Remote or the optional Wall Touch Pad).

If the flames are on, they go down and you hear the valve motor wind down. You hear a clunk and a beep indicating that the valve has received the signal from the Remote.

HOW TO ENSURE YOUR FIREPLACE CANNOT BE TURNED ON INADVERTENTLY

You can use the following method to ensure that your fireplace will not turn on when you don't want it on.

First, ensure your fireplace is turned off—including the pilot—and cold BEFORE going ahead.

- Close the shut-off valve on the gas supply line to the appliance.
- Remove all batteries from the Control Module as well as the batteries from the Remote.
- If unit is hardwired, shut-off power at the breaker.

Automatic Shut-Off (in certain conditions)

Your fireplace's Remote is equipped with an automatic shut-off mechanism which is activated in certain conditions. See page 44 in the Remote Control Operation section for a description of this feature.

NOTE: Before using the remote control system for the first time, the Control Module and the Remote are synchronized at the factory. See the section SÓLAS Remote Pairing Set-up on page 38 of this manual if the Control Module and Remote lose synchronization.

IMPORTANT: BEFORE YOU BEGIN, please note that with this system, the settings of time, temperature and automatic ON/OFF can only be programmed when the function display is flashing. Be patient when programming as it does take time to set-up.

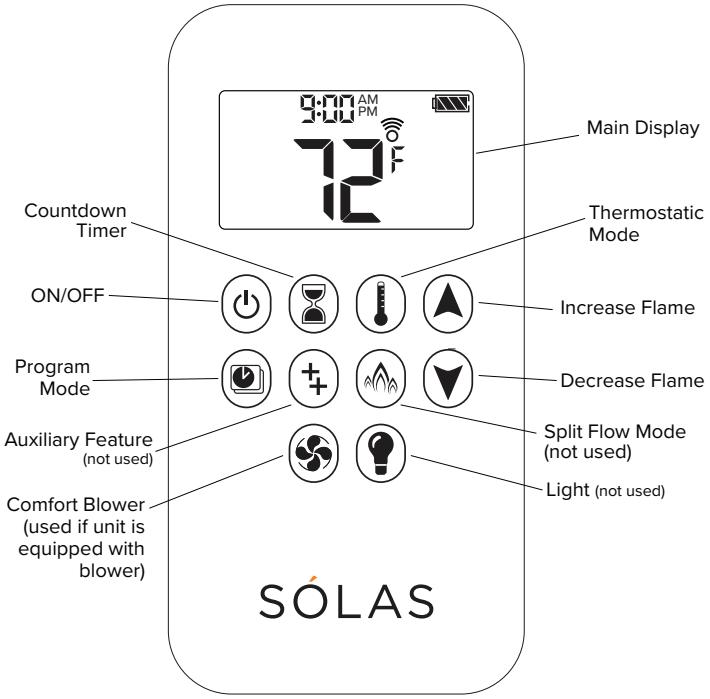

SÓLAS One-Touch Programmable Thermostatic Remote
Part #S-507

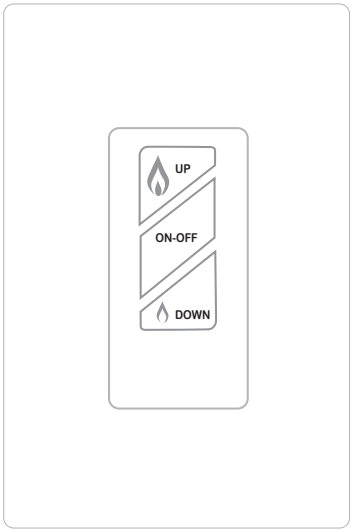

SÓLAS Wall Touch Pad*
(Optional)

Part #WTP-1500

*Not Compatible with SÓLAS Self-Calibrating Power Vent Kit

SÓLAS

ONE-TOUCH REMOTE MAIN DISPLAY OVERVIEW

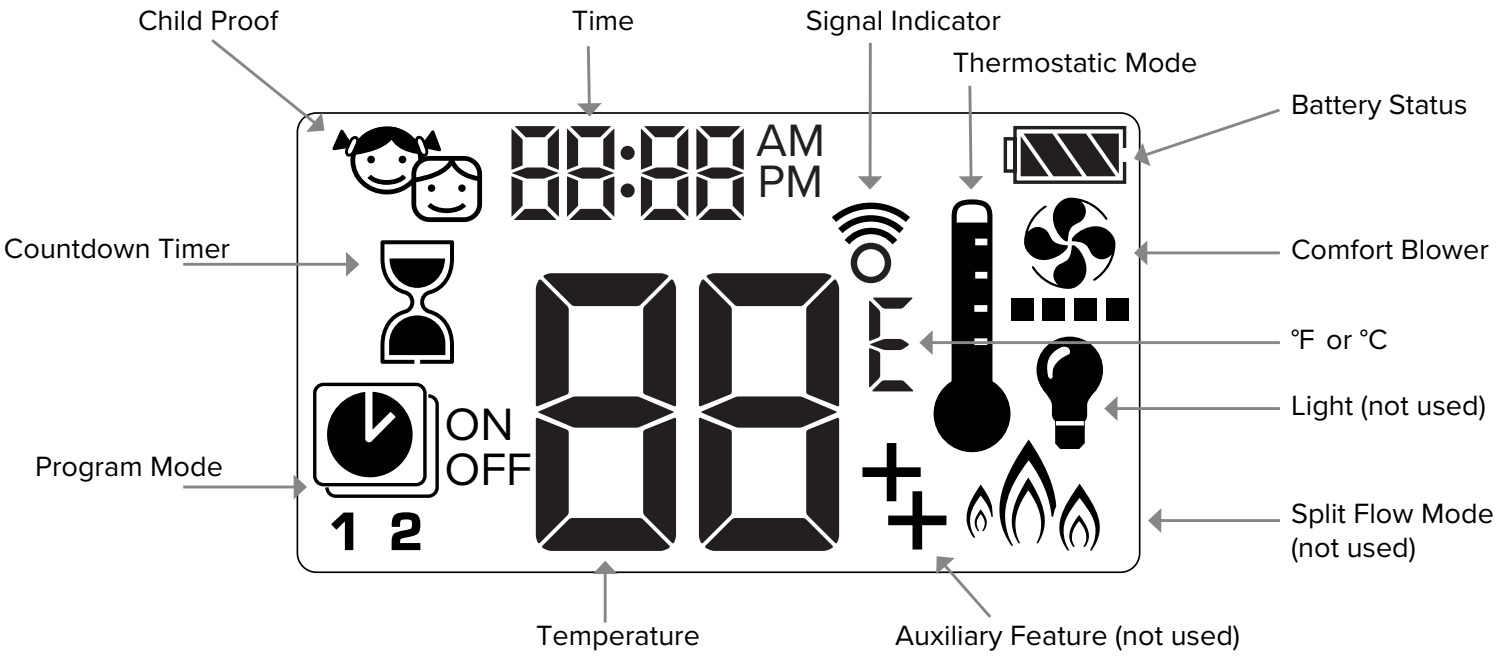

DO NOT leave the Remote on the hearth, mantel, or on top of the fireplace. Use the Remote wall mount holder provided.

TO TURN ON FIREPLACE

CAUTION
WHEN PILOT IGNITION IS CONFIRMED, MOTOR TURNS AUTOMATICALLY TO MAXIMUM FLAME HEIGHT.

One-Touch Lighting (default):

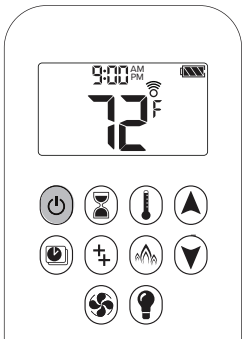

Press and hold ⏻ for 4 seconds, until 8 short beeps and a blinking series of lines confirms the start sequence has begun. Release button.

Main gas flows once pilot ignition is confirmed.

Remote automatically goes into manual mode after main burner ignition. The fireplace will default to HI flame.

STANDBY MODE (PILOT FLAME)

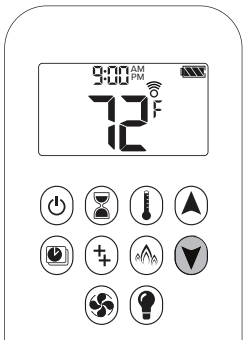

Press and hold ▼ to set appliance to pilot flame.

CAUTION
If the pilot does not stay lit after several tries call your local service technician or gas supplier.

TO TURN OFF FIRE

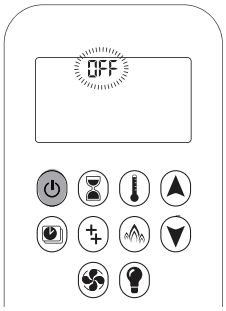

- Press ⏻ to turn OFF. When the pilot is off, it will take 2 minutes before it can be lit again.

NOTE: There is a 2 minute delay after switching off before the next ignition is possible.

CAUTION
Always check the fire and pilot visually to ensure they are off.

FLAME HEIGHT ADJUSTMENT

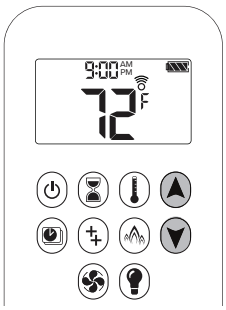

To increase flame height, press and hold ▲.

To decrease flame height, press and hold ▼. You may hold the button down until the fire is set to pilot flame only.

DESIGNATE LOW AND HIGH FIRE

Double-Click DOWN Arrow ▼ button. “LO" is displayed.

NOTE: Flame goes to high fire first before going to designated low fire.

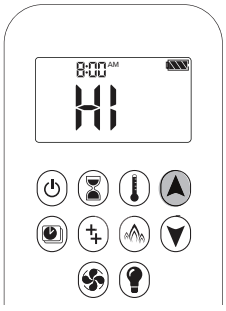

Double-Click UP Arrow ▲ button. Flame automatically foes to high fire. “HI" will be displayed.

SETTING CELSIUS OR FAHRENHEIT

To change between °C and °F, press and hold ⏻ + ⌛ simultaneously.

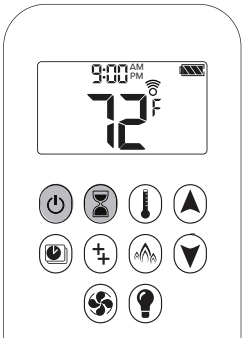

Note: When Remote is in °C (Celsius) mode the clock will be 24-hour. When Remote is in °F (Fahrenheit) mode the clock will be 12-hour.

SETTING THE TIME

1. Press ▲+▼ simultaneously. **Day** flashes.
2. Press ▲+▼ to select a number to correspond with the day of the week.
   - 1 = Monday
   - 2 = Tuesday
   - 3 = Wednesday
   - 4 = Thursday
   - 5 = Friday
   - 6 = Saturday
   - 7 = Sunday
3. Press ▲+▼ simultaneously. **Hour** flashes.
4. To select hour press ▲ or ▼.
5. Press ▲+▼ simultaneously. **Minutes** flash.
6. To select minutes press ▲ or ▼.
7. To confirm, press ▲ or ▼ simultaneously or wait.

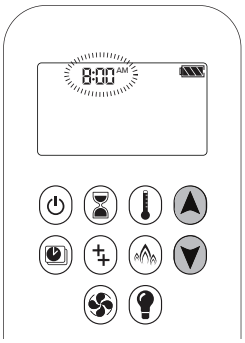

CHILD PROOF

Your Remote can be set to lock out all commands to the fireplace, except OFF.

To turn Child Proof ON:

1. Press and hold ⏻ + ▼ simultaneously.
2. 🔒 is displayed. Child Proof is now active.

To turn Child Proof OFF:

1. Press and hold ⏻ + ▼ simultaneously.
2. 🔒 disappears. Child Proof is now inactive, and the Remote has full function.

COUNTDOWN TIMER

You can set your fireplace to automatically turn off at the end of a timer.

To set a Countdown Timer:

1. Press and hold ⌛ until ⌛ is displayed. **Hour** flashes.
2. Press ▲ or ▼ to select Hour.
3. To confirm, press ⌛. **Minutes** flash.
4. Press ▲ or ▼ to select Minutes.
5. To confirm, press ⌛ or wait.

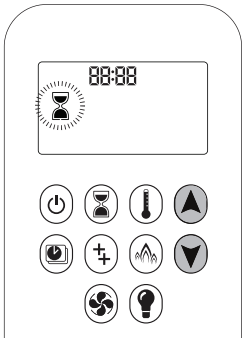

To turn off a Countdown Timer:

1. Press ⌛, and the ⌛ countdown disappears.

NOTE: The Countdown Timer only works in Manual and Thermostatic modes. Maximum countdown time is 9 hours and 50 minutes.

MODES OF OPERATION

Manual Mode

The ON/OFF status of the fireplace, as well as flame height, are manually controlled by the user.

Thermostatic Mode

The room temperature is measured and compared to the set temperature. The flame height is automatically adjusted to achieve the set temperature.

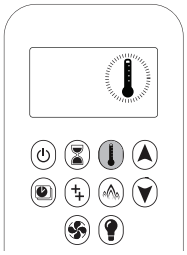

ON:

Press . is displayed. Preset temperature displays briefly, followed by the room temperature.

Setting Desired Temperature:

1. Press and hold until is displayed and set temperature flashes.
2. To adjust set temperature, press or .
3. To confirm, press or wait.

OFF:

1. Press .
2. Press or to go to Manual Mode.
3. Press to go to Program Mode.

Program Mode

The temperature is controlled by Programs 1 and 2, each of which can be set to go on and off at specific times, at a set temperature.

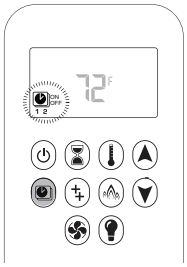

PROGRAM MODE

ON:

Press .

, 1 or 2, **ON** or **OFF** are displayed.

OFF:

1. Press , or to go to Manual Mode.
2. Press to go to Thermostatic Mode.

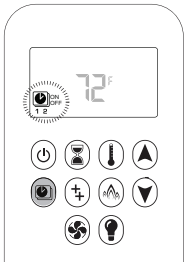

NOTE: The set temperature for Thermostatic Mode is the temperature for the ON time in Program Mode. Changing the Thermostatic Mode set temperature also changes the ON time temperature in Program Mode.

Default Settings:

- ON TIME (Thermostatic) TEMPERATURE: 70°F / 21°C
- OFF TIME TEMPERATURE: " " (pilot flame only)

Temperature Setting:

1. Press and hold until flashes. **ON** and set temperature (set in Thermostatic Mode) is displayed.
2. To continue, press or wait. , **OFF** displayed, temperature flashes.
3. Select off temperature by pressing or .
4. To confirm, press .

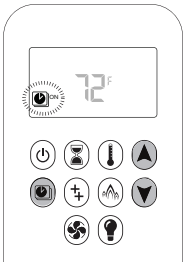

NOTE: The on (Thermostatic) and off set temperatures are the same for each day.

Day Setting:

1. ALL flashes. Press or to choose between:
   - **ALL** = same settings ON-OFF every day
   - **SA:SU** = same settings ON-OFF Saturday and Sunday
   - **1, 2, 3, 4, 5, 6, 7** = daily timer—unique ON-OFF settings for a single day of the week, for multiple days of the week or for every day of the week.
2. To confirm, press .

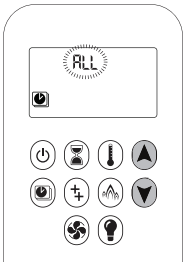

ALL Selected

On Time Setting (PROGRAM 1)

1. , **1, ON** are displayed. ALL is displayed briefly. Hour flashes.
2. To select hour, press or .
3. To confirm, press . , **1, ON** are displayed. ALL displayed briefly. Minutes flash.
4. To select minutes, press or .
5. To confirm, press .

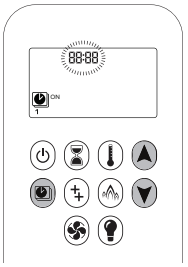

PROGRAM MODE (Continued)

Off Time Setting (PROGRAM 1)

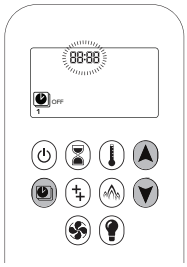

1. , **1, OFF** are displayed. ALL is displayed briefly. Hour flashes.
2. To select hour, press or .
3. To confirm, press . , **1, OFF** are displayed. **ALL** displayed briefly. Minutes flash.
4. To select minutes, press or .
5. To confirm, press .

NOTE: Either continue to PROGRAM 2 and set ON and OFF times or stop programming at this point, and PROGRAM 2 remains deactivated.

NOTE: PROGRAM 1 and 2 use the same ON (Thermostatic) and OFF temperatures. Once a new ON (Thermostatic) and/or OFF temperature has been set, that temperature becomes the new default setting.

NOTE: ON and OFF times programmed for PROGRAM 1 and PROGRAM 2 become the new default times.

The batteries must be removed to clear the PROGRAM 1 and PROGRAM 2 ON and OFF times and temperatures.

SA: SU or Daily Timer (1-7) Selected

- Set ON time and OFF time using the same procedure as "**ALL** Selected" above.
- Waiting to finish setting.

LOW BATTERY INDICATION

CAUTION

Do not use a screwdriver or other metallic object to remove the batteries from the Control Module battery holder or the Remote. This could cause a short circuit.

NOTE: The batteries in your SÓLAS One-Touch remote control and control module are to be replaced annually. Only use brand-name alkaline batteries such as Duracell or Energizer.

Remote

The battery icon will show when the battery needs to be replaced. Replace with two 1.5 V AAA alkaline batteries.

Control Module

Frequent beeps for 3 seconds when the motor turns indicate the batteries in the battery holder of the Control Module need to be replaced. Replace with four 1.5 V AA alkaline batteries.

AUTOMATIC SHUT-OFF

Countdown Timer

At the end of countdown time period, the fire turns off. The Countdown Timer only works in Manual and Thermostatic. Maximum countdown time is 9 hours and 50 minutes.

Seven Day Shut Off

If there is no activity for 7 days, the SÓLAS fireplace will automatically shut down the pilot as required by certain jurisdictions.

AUTOMATIC TURN DOWN

3 Hour No Communication Function

If your fireplace and remote are inactive for three hours—for example, if the remote is left in another room—your fireplace automatically turns down to pilot.

Benefit

SÓLAS products are designed with a focus on safety and environmental responsibility. This will help save fuel and is an environmental benefit. Program the temperature and timer modes to maximize your heating efficiency.

ERROR CODE	MESSAGE	DURATION OF DISPLAY	SYMPTOM	POSSIBLE CAUSE
F04	F04	4 seconds	• No pilot flame within 30 sec • **Note**: After 3 failed ignition sequences, F06 shown	• No gas supply • Air in pilot supply line • No spark • Reversed polarity in thermocouple wiring
F06	F06	4 seconds	• 3 failed ignition sequences in 5 minutes • Fire is not responding, no pilot flame	• No gas supply • Air in pilot supply line • No spark • Reversed polarity in thermocouple wiring • Incorrect pilot orifice if valve has been converted from LPG to NG or vice versa
F07	Low Battery Symbol	Permanent	• Battery icon flashes on Remote display	• Low battery in Remote
F09	F09	4 seconds	• Fire is not responding • No electronic control of fire	• Down arrow button was not pressed during pairing • Control Module and Remote are not synced
F46	F46	4 seconds	• Fire is not responding • Intermittent response • No electronic control of fire	• No or bad connection between Control Module and Remote • No power at Control Module (batteries low) • Low communication range (main adapter faulty, Remote not communicating with Control Module)

SÓLAS ONE-TOUCH REMOTE TIPS

- Double-click to go directly to **LO** (lowest) flame setting.
- Double-click to go directly to **HI** (highest) flame setting.
- Only use brand name alkaline batteries, such as Duracell or Energizer.
- When using the Remote, it should be within 15 feet (4.5 meters) of the fireplace.
- Don't leave the Remote on the mantel or hearth or any hot surfaces. Use the Remote wall holder provided.
- To keep out of children's reach, use the Remote wall holder provided.
- Be patient when programming: it takes time to set-up.
- Once you turn a pilot off, it takes a few minutes before your can turn it back on.

Your SÓLAS Dealer is here to help, if you have any trouble with your SÓLAS Fireplace or SÓLAS One-Touch Remote. Please contact your Dealer for support.

GAS CONVERSION

SÓLAS appliances are shipped from the factory ready for Natural Gas and are field convertible to Propane when a SÓLAS gas conversion kit is used. Gas conversions must be performed by a qualified service technician, or licensed gas fitter where local code requires. Installation must be performed by a licensed service technician, if not the warranty is void.

SÓLAS Gas Fireplaces are approved for installation at elevations up to 2000 feet in the U.S. and 1370 meters (4500 feet) in Canada without change. If your installation is at an elevation greater than those noted, consult with the local authority having jurisdiction for gas product installations to determine their specific requirements for high altitude installations.

PART #	DESCRIPTION	SÓLAS CONVERSION KIT CONTENTS		
SL16-LPC	**ONE6 LP** CONVERSION KIT	#27 PILOT ORIFICE	#58 LP BURNER ORIFICE – 1PC	#8 SCREW – 1PC

1. The burner is retained by (2) #10 sheet metal screws at the rear of the burner at the far left and right sides, see white arrows in the image below. Remove these (2) #10 sheet metal screws using a 5⁄16” extended nut driver and ratchet.

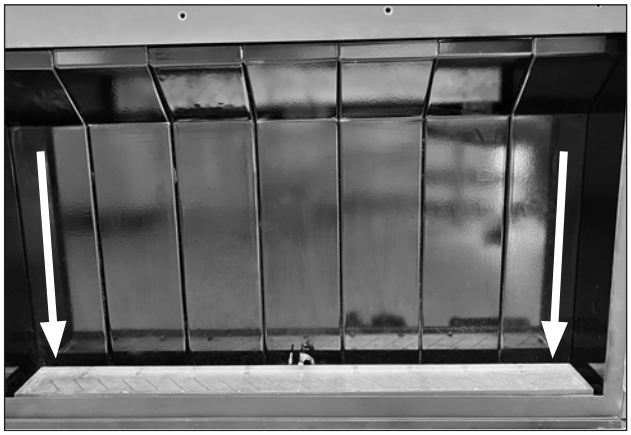

2. Slide the burner to the right side of the firebox, lift the right side of the burner first to disengage the burner from the burner orifice.

3. Using a 9/16” deep socket, remove and replace the burner orifice with the correct orifice provided in the conversion kit.

4. When converting to propane, remove collar on burner inlet tube. When converting to natural gas install collar over burner inlet tube and secure with #8 sheet metal screw provided using a ¼" nut driver.

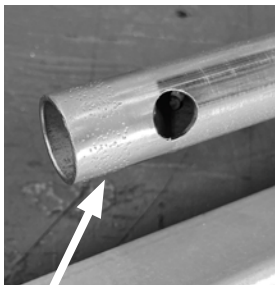

Collar OFF for LP

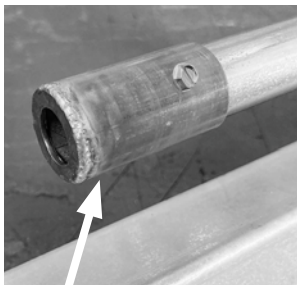

Collar ON for NG

5. Remove the (2) #10 sheet metal screws using a 5⁄16" nut driver that hold the pilot assembly in the fireplace.

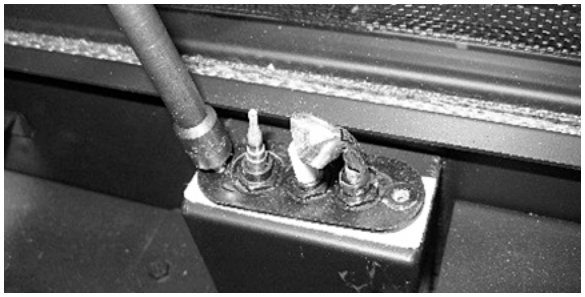

6. Lift the pilot assembly into the fireplace which will give you access to the fittings under the pilot assembly. Take extra caution to not damage ceramic electrode on pilot assembly.

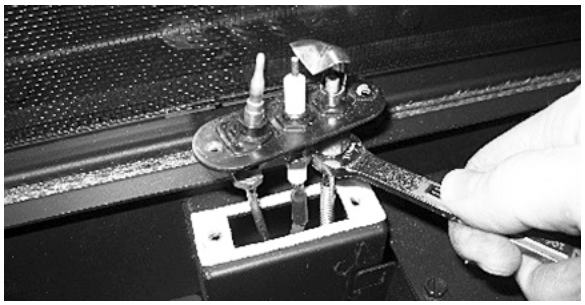

7. Using a 10mm wrench, remove the pilot gas line and swap the pilot orifice with the one supplied in the conversion kit. Be sure that the pilot orifice is fully seated and the pilot gas line is tightened properly to prevent leaks around the orifice. If not seated properly this will cause an unusually high pilot flame.

Pilot orifice correctly sealed

8. Once the pilot gas line is tightened, reinstall the pilot assembly in the fireplace using the two #10 sheet metal screws provided. Ensure pilot gasket is intact.
9. Reinstall the burners in the fireplace and the burner link (if required) with #10 sheet metal screws using a 5⁄16" nut driver.

(continued on next page)

GAS FLOW ADJUSTMENT

It is required you adjust the gas valve when converting the fireplace.

1. Locate and remove the pressure conversion brass plug and set it for NG or LP accordingly. Reinstall and tighten.

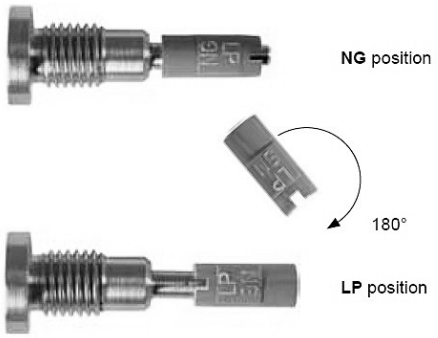

2. Locate and loosen the two ¼" - 20 nuts under gas valve assembly in the front of the fireplace, using a 7⁄16" socket with 6" exension. To locate the second one it is necessary to to swing the receiver module up to the left.

3. The entire gas valve assembly is on flexible connectors which allows you to lift it out of the fireplace as shown. Be sure all wires and gas lines are free when pulling gas valve assembly out of fireplace.

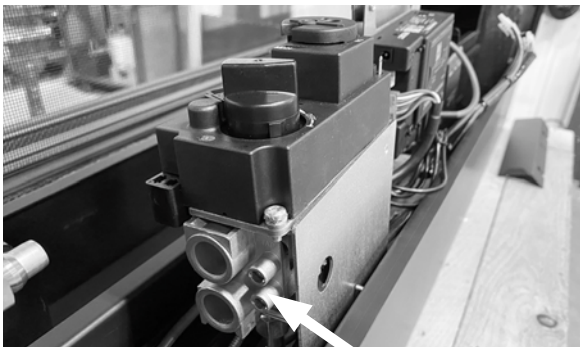

4. Confirm inlet pressure of gas (top pressure tap on valve) is between 5.5" w.c. to 10.0" w.c. for natural gas and 11" w.c. to 13" w.c. for propane. If pressure is not within these parameters, correct any gas supply pressure issue before continuing with conversion. Close the pressure tap.
5. Install a pressure gauge on the outlet pressure tap on the valve.
6. Light the fireplace using the remote control.
7. With the fireplace set on the highest flame level, set the high manifold pressure by adjusting the small flat screw set within the brass pressure conversion plug. Refer to the chart below for high pressure settings which vary per model fireplace.
8. With the fireplace set on the lowest flame level, set the low manifold pressure by adjusting the 4mm allen screw on the bottom side of the valve. Refer to the chart below for low manifold pressure settings which vary per model fireplace.

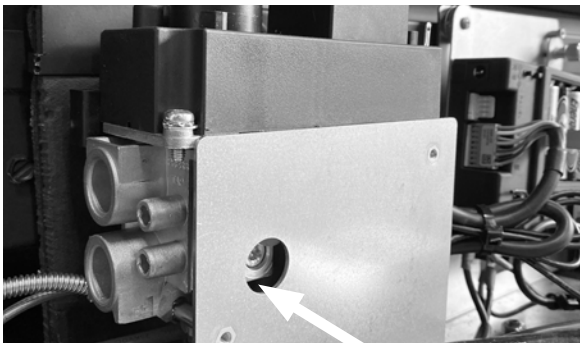

9. Ensure all pressure taps are closed and check all connections/pressure taps for leaks.

(continued on next page)

MANIFOLD PRESSURE SPECIFICATIONS

MODEL	HIGH PRESSURE	LOW PRESSURE
ONE6 - LP	10.0” w.c. / 2.5kPa	3.1” w.c. / 0.77kPa

GAS CONVERSION LABEL INSTRUCTIONS

1. When converting this fireplace, use a permanent marker to complete the supplied gas conversion label then affix it to the right side of fireplace above the control module as pictured below.

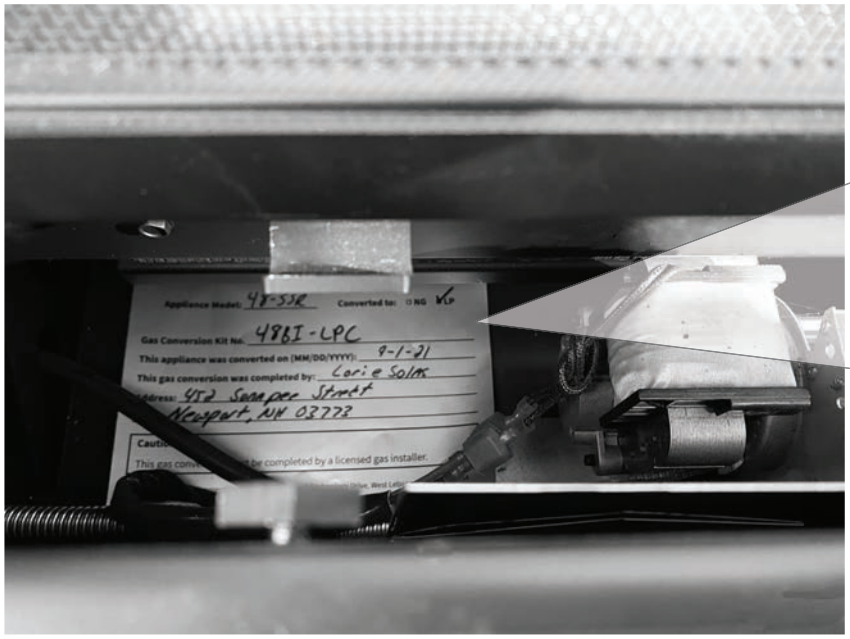

SÓLAS

This fireplace has been converted in the field. This label must be filled out with indelible ink and affixed in a conspicuous location near the appliance listing label.

Appliance Model: _____ **Converted to:** ☐ **NG** ☐ **LP**

Gas Conversion Kit No. _____

This appliance was converted on (MM/DD/YYYY): _____

This gas conversion was completed by: _____

Address: _____

_____

Caution:

This gas conversion must be completed by a licensed gas installer.

2. Affix the supplied rating plate conversion label to the rating plate. Be sure to not cover the Model and Gas Pressure information for the model and fuel you are converting to. With a permanent marker, check off the fuel type you are converting to.

SÓLAS – DIRECT VENT GAS FIREPLACES

MODEL NOS. BI-16N, BI-16P
VENTED GAS FIREPLACE HEATER
NOT FOR USE WITH SOLID FUEL.

SER. NO.
BI-16-

THIS APPLIANCE IS EQUIPPED FOR:

NATURAL GAS ☐ PROPANE (LP) GAS ☐

	Natural Gas	Propane	
Input Rating-Btu/hr	This Fireplace has been converted. See conversion label in fireplace.	13,500	Debit Calorifique
Min. Input Rating-Btu/hr Orifice - DMS		7,500	Puissance Minimum L'injector
Manifold Pressure		#58	Press. A la tubulure
Min. Supply Pressure		10.0"wc/2.5kPa	Press. D'Arrivée
Max. Supply Pressure		11.0"wc/2.8kPa	Min Press. D'Arrivée Max
		13.0"wc/3.3kPa	

This product has been tested and listed by PFS TECO to ANSI Z21.88-2016 · CSA 2.33-2016 Vented Gas Fireplace Heaters and CSA 2.17-2017, Gas-Fired Appliances For Use At High Altitudes and CSA P.4.1-09. This appliance is equipped only for altitudes from 0-2000 feet (0-610m) in the USA and 0-4500 feet (0-1370m) in Canada without change. This appliance must be installed in accordance with local codes, if none, follow the *National Fuel Gas Code, ANSI Z223.1* or *Canadian Installation Codes, CAN/CSA-B149.1.* This Appliance must be properly connected to a venting system in accordance with the manufacturer's installation instructions.

MINIMUM CLEARANCES TO COMBUSTIBLE CONSTRUCTION:

Fireplace Surround to L. Side Wall	0" (0mm)
Fireplace Surround to R. Side Wall	0" (0mm)
Fireplace Surround to Corner Wall	0" (0mm)
Fireplace Surround to Ceiling Wall	0" (0mm)
Fireplace Surround to Rear Wall	0" (0mm)

This Fireplace has been converted.

See conversion label in fireplace.

ANNUAL MAINTENANCE

A qualified service agency should conduct an annual inspection and maintenance of your SÓLAS Gas Fireplace including the overall installation and venting to keep it running safely. The following procedures should be performed only by a qualified service technician. The gas supply should be turned off and the stove should be completely cool whenever a maintenance procedure is performed. All parts of the appliance that are removed for servicing must be replaced prior to operation.

This appliance should be inspected before use and at least annually by a qualified service technician. More frequent cleaning may be required due to excessive dust or lint from carpeting, bedding materials, pets, etc. It is imperative that control compartments and circulating air passageways of this appliance be kept clean.

CLEANING THE BURNER & FIREBOX

During the annual inspection and maintenance appointment, the service technician should clean the burner and firebox. To gain access to the firebox and burner, follow the instructions beginning on page 34 and 35 of this manual.

DO NOT USE A VACUUM CLEANER TO CLEAN THE GLASS BURNER MEDIA.

A vacuum cleaner may be used to clean the metal parts of the firebox. Leave the glass burner media in place. **Use a soft brush to clean the burner glass media**. If the burner media does need to be removed, carefully scoop it off the burner and avoid dropping glass pieces in the air gaps around the burner. Follow the instructions on page 33 of this manual when replacing the burner media on the burner top.

AIR FLOW

The SÓLAS Gas Fireplace utilizes a convection air heat exchange system to maximize heat delivered from the fireplace. It is important that air flows freely through the convection air system and out the air grills. Do not place objects against the fireplace that will block the convection air inlet flow or in front of any air outlet.

CLEANING GLASS AND PORCELAIN ENAMEL PANELS

WARNING: Never clean the Glass or Enamel Panels while they are hot. Do not use abrasive cleaners or cleaners containing ammonia.

When the fireplace is first operated, there may be some vapors and a visible white film left on the glass and panels. This white film, a mineral deposit, is a normal by-product of the combustion process in a gas appliance. The composition of the deposit varies with location and time and is believed to be associated with varying sulfur content in the gas. You may experience this problem intermittently.

We have consulted with ceramic glass manufacturers and they cannot offer a definitive solution to the issue. The following are recommendations only and are not meant to guarantee results. NOTE: This is an issue beyond SÓLAS's control and is not covered under warranty.

- Clean the glass and porcelain enamel panels regularly as soon as you notice a white film build-up. If the film is left for a longer period of time it will etch into the glass and may be harder or impossible to remove.
- NEVER use an abrasive cleaner or an Ammonia-based cleaner on the ceramic glass. An abrasive cleaner will compromise the strength of the glass, An emulsion type cleaner is recommended.
- Use a damp, soft micro-fiber cloth or cotton cloth to apply the cleaner. Dry glass with a soft, dry cloth. (Paper towels and synthetic materials are abrasive to ceramic glass and should not be used)
- We have had good results from the following products, however we cannot guarantee results; Brasso, Polish Plus by Kel-kem, Cook Top Clean Creme by Elco, White Off by Rutland, Turtle Wax.
- **DO NOT CLEAN GLASS WHILE IT IS HOT!**

NOTE: The batteries in your SÓLAS One-Touch remote control and control module are to be replaced annually. Only use brand name alkaline batteries such as Duracell or Energizer.

BATTERY REPLACEMENT

CONTROL MODULE BATTERIES

Inside your fireplace, there are (4) AA batteries installed inside of the control module.

Frequent beeps for 3 seconds when the motor turns indicates the batteries inside the Control Module are low.

1. Remove air panel, left and right side panels and screen as shown on page 34.
2. Loosen silver thumb screw located on the top right side of the control module.

3. Slide the control module assembly up and to the left as shown.

4. The cover on the control module slides up, exposing the (4) AA batteries. Replace with (4) AA alkaline batteries. We recommend a name brand such as Duracell or Energizer.

5. Replace the battery cover, slide control module back into the fireplace and tighten silver thumb screw.
6. To reinstall the safety screen, reverse the steps on page 34.

SÓLAS ONE-TOUCH REMOTE BATTERIES

Your remote display will indicate when the batteries are low .

The remote uses a (2) AAA alkaline batteries—we recommend a name brand such as Duracell or Energizer.

The batteries should last one full season, depending on usage.

Remove the batteries in the off-season to extend battery life.

NOTE: Even though your fireplace is hardwired to 120V in your home, the batteries in your SÓLAS One-Touch remote control and control module are to be replaced annually. Only use brand name alkaline batteries such as Duracell or Energizer.

MAINTENANCE LOG

We strongly recommend that you keep a log of the regular maintenance that is performed on your SÓLAS fireplace. We have provided the maintenance form below to make it easy. Simply ask your qualified service technician to fill out one of the maintenance record forms below each time the fireplace is serviced. This will help insure that all of the required maintenance procedures have been completed, at least annually. Regular maintenance will help keep the fireplace functioning in a safe and reliable manner. Additional forms are available from your installer or service technician when needed.

Date of Service: _____

Serviced By: _____

Service Performed:

- ☐ Clean Burner & Firebox
- ☐ Clean Control Area
- ☐ Clean Convection Air System
- ☐ Leak Test Gas Connections
- ☐ Other_____

Date of Service: _____

Serviced By: _____

Service Performed:

- ☐ Clean Burner & Firebox
- ☐ Clean Control Area
- ☐ Clean Convection Air System
- ☐ Leak Test Gas Connections
- ☐ Other_____

Date of Service: _____

Serviced By: _____

Service Performed:

- ☐ Clean Burner & Firebox
- ☐ Clean Control Area
- ☐ Clean Convection Air System
- ☐ Leak Test Gas Connections
- ☐ Other_____

Date of Service: _____

Serviced By: _____

Service Performed:

- ☐ Clean Burner & Firebox
- ☐ Clean Control Area
- ☐ Clean Convection Air System
- ☐ Leak Test Gas Connections
- ☐ Other_____

Date of Service: _____

Serviced By: _____

Service Performed:

- ☐ Clean Burner & Firebox
- ☐ Clean Control Area
- ☐ Clean Convection Air System
- ☐ Leak Test Gas Connections
- ☐ Other_____

Date of Service: _____

Serviced By: _____

Service Performed:

- ☐ Clean Burner & Firebox
- ☐ Clean Control Area
- ☐ Clean Convection Air System
- ☐ Leak Test Gas Connections
- ☐ Other_____

REPLACEMENT PARTS LIST

PART NAME	P/N	PART NAME	P/N
Pilot Head NG/LP	M26-501N / M26-501P	Burner Orifice (NG)	16N-509
Pilot Thermocouple*	M26-502*	Burner Orifice (LP)	16P-509
Pilot Injector (NG)	16N-503	Burner Glass Media – Clear	16-511
Pilot Injector (LP)	16P-503	Burner Module (NG)	16N-901
SÓLAS One-Touch Control Module	S-504	Burner Module (LP)	16P-901
Wall Touch Pad** (Optional)	WTP-1500	Firebox Enamel Panel – Rear	16-512
SÓLAS One-Touch Remote	S-507	Firebox Enamel Panel – Left	16-513
Gas Valve (Maxitrol)	M46-515	Firebox Enamel Panel – Right	16-514
TC Line Red	M46-701	Thermocouple Interrupter Block	M46-703
TC Line Yellow	M46-702	8-Wire Connecting Cable	M46-704
		Glass Assy (including gasket & frame)	16-510

***This is a quick response thermocouple. Replace it only with SÓLAS Part Number M26-502.**

****Not Compatible with SÓLAS Self-Calibrating Power Vent Kit**

For Replacement Parts and customer service, contact your SÓLAS Dealer or;

SÓLAS, LLC
452 Sunapee Street, Newport, NH 03773
P (603) 298-5169 sales@solasfires.com

CONTROL SCHEMATIC

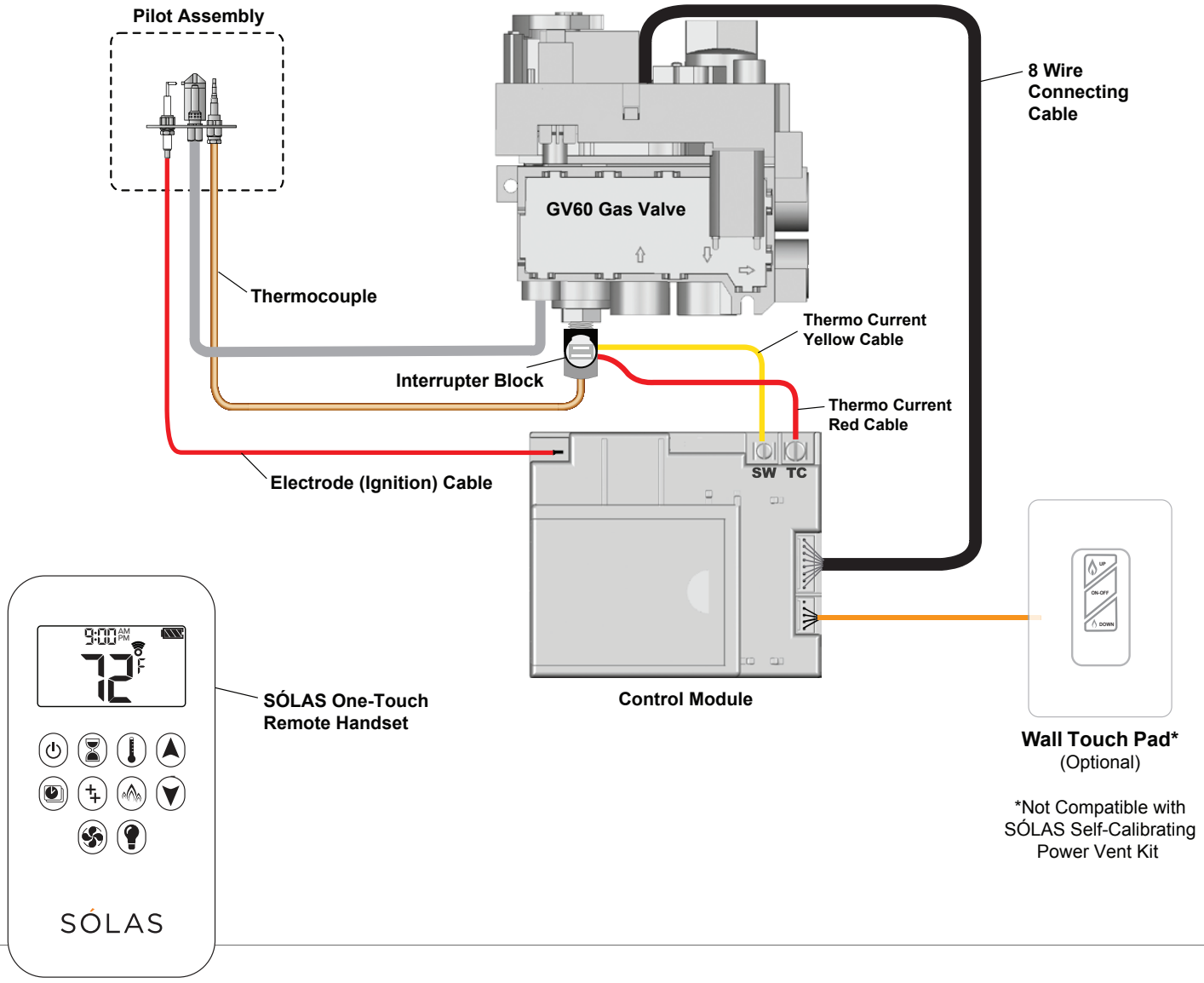

Caution
Label all wires prior to disconnection when servicing the controls. Wiring errors can cause improper and dangerous operation. Verify proper operation after servicing.

SÓLAS

For Replacement Parts and customer service, contact your SÓLAS Dealer or;

SÓLAS, LLC
452 Sunapee Street, Newport, NH 03773
P (603) 298-5169 sales@solasfires.com

WARRANTY INFORMATION

THE WARRANTY

SÓLAS, LLC, a division of Progressive Manufacturing, Inc. ("SÓLAS"), Limited Lifetime Warranty warrants your SÓLAS brand gas fireplace ("Product") to be free from defects in materials and workmanship at the time of manufacture. The Product body and firebox carry the Limited Lifetime Warranty on workmanship defects causing loss of structural integrity. Ceramic glass carries the Limited Lifetime Warranty against thermal breakage only. After installation, if covered components manufactured by SÓLAS are found to be defective in material or workmanship during the Limited Lifetime Warranty period and while the Product remains at the site of the original installation, SÓLAS will, at its option, repair or replace the covered components. If repair or replacement is not commercially practical, SÓLAS will, at its option, refund the purchase price or wholesale price of the SÓLAS product, whichever is applicable. SÓLAS will also pay their prevailing labor rates, as determined in its sole discretion, incurred in repairing or replacing such components during the warranty period. THERE ARE EXCLUSIONS AND LIMITATIONS to this Limited Lifetime Warranty as described herein.

COVERAGE COMMENCEMENT DATE
Warranty coverage begins on the date of installation. The warranty shall commence no later than 24 months following the date of product shipment from SÓLAS, regardless of the installation date.

EXCLUSIONS AND LIMITATIONS
This Limited Lifetime Warranty applies only if the Product is installed in the United States or Canada and only if operated and maintained in accordance with the printed instructions accompanying the Product and in compliance with all applicable installation and building codes and good trade practices.

This warranty is non-transferable and extends to the original owner only. The Product must be purchased through a listed supplier of SÓLAS and proof of purchase must be provided. The Product body and firebox carry the Limited Lifetime Warranty. The following do not carry the Limited Lifetime Warranty, but are warranted as follows:

- **Burner** – Repair or replacement for three years from date of installation.
- **Gas components & electrical components** – Repair or replacement for one year from date of installation.
- **Blowers & remote controls** – Repair or replacement for one year from the date of installation.
- **Porcelain Firebox Liners** – Replacement for one year against cracking or breakage due to thermal stress from date of installation. Excludes surface and hairline cracks and scratches or slight color changes that do not affect the operation or safety of the unit.
- **Gaskets** – Repair or replacement for one year from the date of installation.
- **Surrounds** – Replacement for one year against cracking or breakage due to thermal stress. Excludes surface and hairline cracks and scratches or slight color changes that do not affect the operation or safety of the unit.
- **Labor coverage** – Prevailing SÓLAS rates apply for the warranty period of the component. SÓLAS will not be liable for travel costs for service work.

SÓLAS will not be responsible for: (a) damages caused by normal wear and tear, accident, riot, fire, flood, or acts of God; (b) damages caused by abuse, negligence, misuse, or unauthorized alteration or repair of the Product affecting its stability or performance. The Product must be subjected to normal use. The product is designed to burn either natural or propane gas only. Burning conventional fuels such as wood, coal or any other solid fuel will cause damage to the Product, will produce excessive temperatures and could result in a fire hazard. (c) Damages caused by failing to provide proper maintenance and service in accordance with the instructions provided with the Product; (d) damages, repairs or inefficiency resulting from faulty installation or application of the Product.

Discoloration and some minor expansion, contraction, or movement of certain parts and resulting noise is normal and not a defect, and, therefore, not covered under warranty. The installer must ensure the appliance is burning as per the rating tag at the time of installation. Over-firing (operation above the listed BTU rate) of this appliance can cause serious damage and will nullify this warranty.

This warranty is void if:

a) The unit has been operated in atmospheres contaminated by chlorine, fluorine or other damaging chemicals.

b) The unit is subject to submersion in water or prolonged periods of dampness or condensation.

c) Any damage to the unit, combustion chamber, heat exchanger or other components due to water or weather damage which is the result of, but not limited to improper chimney/venting installation.

Damage to stainless steel, gold, nickel or porcelain enameled surfaces caused by fingerprints, scratches, melted items, or other external sources left on these surfaces from the use of cleaners is not covered in this warranty.

SÓLAS is not responsible for inadequate fireplace system draft caused by air conditioning and heating systems, mechanical ventilation systems, or general construction conditions which may generate negative pressure in the room in which the appliance is installed. Additionally, SÓLAS assumes no responsibility for drafting conditions caused by venting configurations, adjoining trees or buildings, adverse wind conditions or unusual environmental factors and conditions that affect the operation of the unit.

This Limited Lifetime Warranty covers only parts and labor as provided herein. In no case shall SÓLAS be responsible for materials, components, or construction, which are not manufactured or supplied by SÓLAS or for the labor necessary to install, repair, or remove such materials, components, or construction. Additional utility bills incurred due to any malfunction or defect in equipment are not covered by this warranty. All replacement or repair components will be shipped F.O.B. from the nearest stocking SÓLAS facility.

LIMITATION ON LIABILITY
It is expressly agreed and understood that SÓLAS' sole obligation and the purchaser's exclusive remedy under this warranty, under any other warranty, expressed or implied, or in contract, tort or otherwise, shall be limited to replacement, repair, or refund, as specified herein.

In no event shall SÓLAS be liable for any incidental or consequential damages caused by defects in the Product, whether such damage occurs or is discovered before or after repair or replacement, and whether such damage is caused by SÓLAS' negligence. SÓLAS has not made and does not make any representation or warranty of fitness for a particular use or purpose, and there is no implied condition of fitness for a particular purpose.

SÓLAS makes no expressed warranties except as stated in this Limited Lifetime Warranty. The duration of any implied warranty is limited to the duration of this expressed warranty.

No one is authorized to change this Limited Lifetime Warranty or to create for SÓLAS any other obligation or liability in connection with the Product. Some states and provinces do not allow the exclusion or limitation of incidental or consequential damages, so the above limitations or exclusions may not apply to you. The provisions of this Limited Lifetime Warranty are in addition to and not a modification of or subtraction from any statutory warranties and other rights and remedies provided by law.

INVESTIGATION OF CLAIMS AGAINST WARRANTY
SÓLAS reserves the right to investigate any and all claims against this Limited Lifetime Warranty and to decide, in its sole discretion, upon the method of settlement.

To receive the benefits and advantages described in this Limited Lifetime Warranty, the appliance must be installed and repaired by a licensed contractor approved by SÓLAS.

Contact SÓLAS at the address provided herein to obtain a listing of approved dealers/distributors. SÓLAS shall in no event be responsible for any warranty work done by a contractor that is not approved without first obtaining SÓLAS' prior written consent.

HOW TO REGISTER A CLAIM AGAINST WARRANTY
In order for any claim under this warranty to be valid, you must contact the SÓLAS dealer/distributor from which you purchased the product. If you cannot locate the dealer/distributor, then you must notify SÓLAS in writing. SÓLAS must be notified of the claimed defect in writing within 90 days of the date of failure. Notices should be directed to the SÓLAS Warranty Department. Visit our website at www.solasfires.com/warranty.

SÓLAS, LLC

P (603) 298-5169
F (603) 298-9246

solasfires.com/warranty

We recommend that our gas hearth products be installed and serviced by professionals who are certified in the U.S. by the National Fireplace Institute® (NFI) as NFI Gas Specialists.

www.NFIcertified.org

RECORD YOUR PRODUCT INFORMATION

Model #: _____ Serial Number: _____

Date Purchased: _____ Date Installed: _____

THANK YOU FOR CHOOSING

SÓLAS

solasfires.com

PROUDLY DESIGNED
& BUILT IN THE
USA